Chapter 3

Block Diagram and Signal Flow graph

3.1 Introduction

A control system consists of number of components. In control engineering to show the functions for performing by each component, commonly use a diagram called a Block diagram. The Block diagram of a system is a pictorial representation of the functions performed by each component and of the flow of signals. The function of each component is represented by line with arrow indicating the flow of signal from output of one block to the input of another. The elements of a block diagram are block, branch point and summing point.

3.2Block diagram representation of systems (BDR) and their reduction

A typical block diagram consists of one or more summing junctions, forward and feedback paths take off points.

The basic elements of block diagram:

- Output = gain X input
- Summing Point: Summing point is the point at which more than one signal can be added or subtracted.

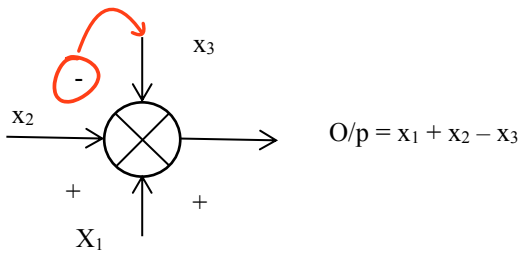

- Take Off Point: The point at which the output signal of any block can be applied to two or more points is known as Take Off Points.

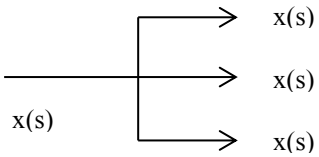

- Forward Path: The direction of signal flow from input to output is known as Forward Path.

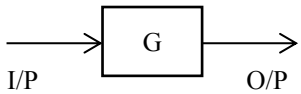

- Feedback Path: The direction of signal flow from output to input is known as Feedback Path.

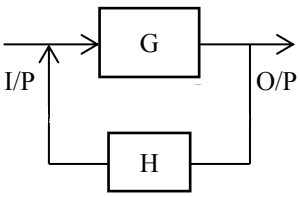

Rules for Block Diagram Reduction

1. Blocks are in series or cascaded.

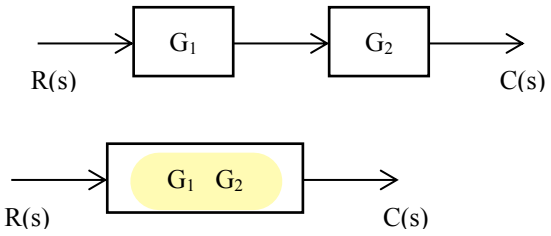

2. Blocks are in parallel

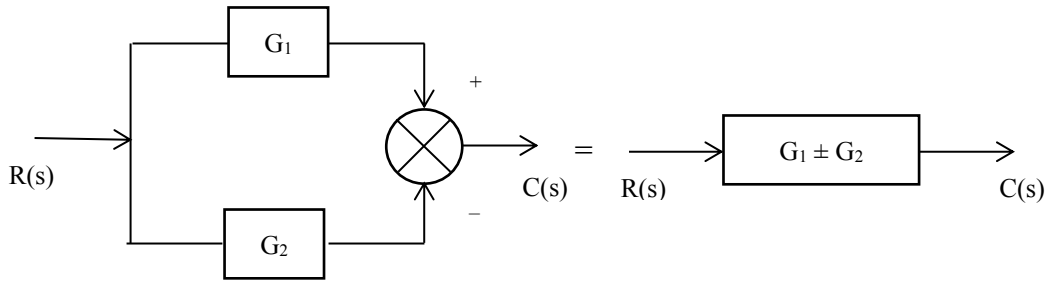

3. Shifting Summing Point before the block

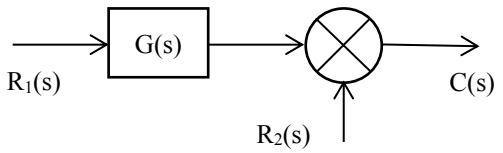

$$C(s) = R_1(s)G(s) + R_2(s)$$

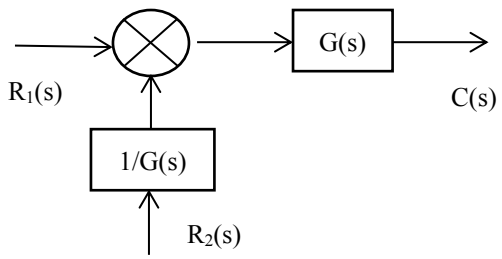

$$C(s) = R_1(s) + R_2(s)\left(\frac{1}{G(s)}\right)$$

$$= \left[R_1(s) + R_2(s)\left(\frac{1}{G(s)}\right)\right]G(s)$$

$$C(s) = R_1(s)G(s) + R_2(s)$$

4. Shifting Summing Point after the block

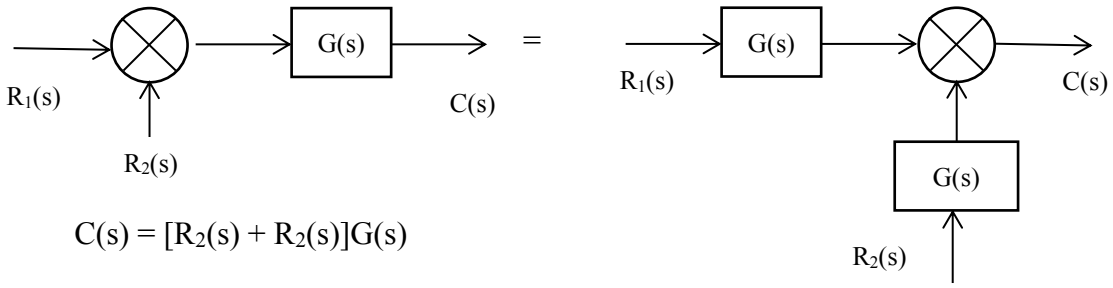

$C(s) = [R_2(s) + R_2(s)]G(s)$

$R_1(s)\,G(s) + R_2(s)\,G(s) = C(s)$

$\therefore C(s) = G(s)[\,R_1(s) + R_2(s)]$

5. Shifting Take Off Point before the block

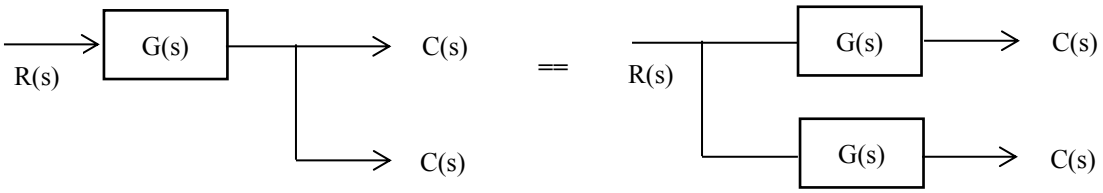

$C(s) = R(s)\,G(s)$

6. Shifting the Take Off Point after the block

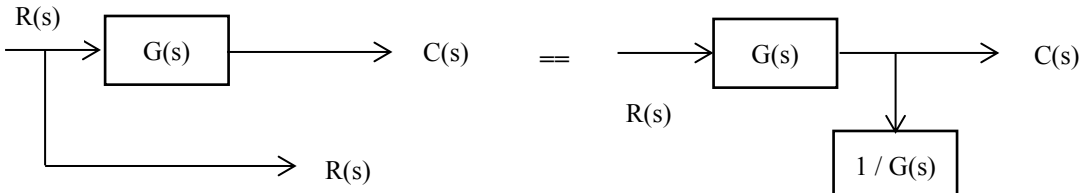

7. Interchanging Summing Point

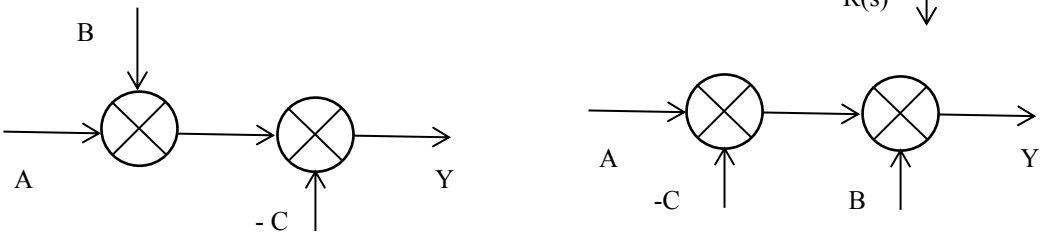

$Y = A + B - C$

$Y = A - C + B$

8. Splitting a Summing Point

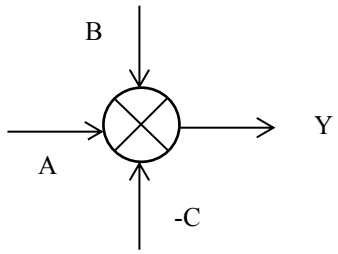

Y = A + B – C

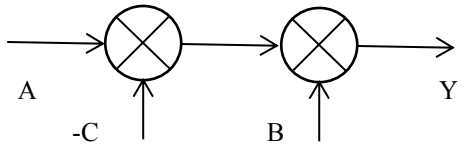

Y = A – C + B

9. Combining Summing Point

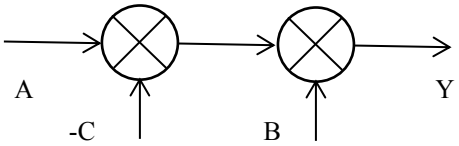

Y = A – C + B

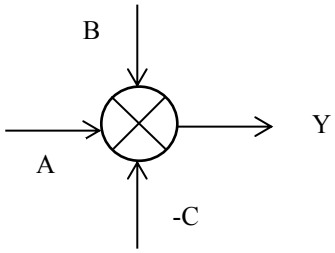

Y = A + B – C

If a block diagram consists of many feedback loops, then find innermost feedback loop.

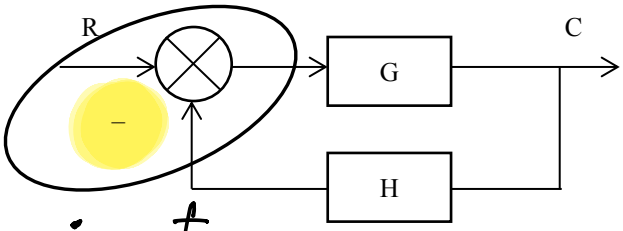

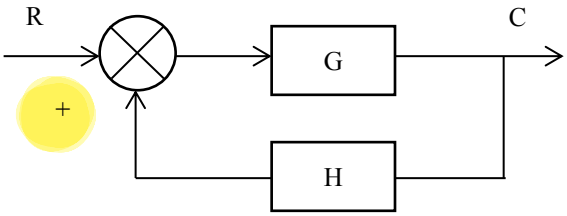

summing pt is removed on solving a loop.

$$\frac{C}{R} = \frac{G}{1+GH}$$

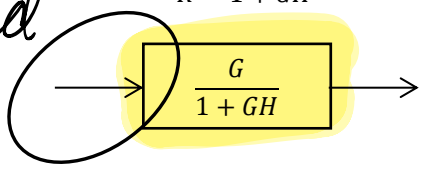

$$\frac{C}{R} = \frac{G}{1-GH}$$

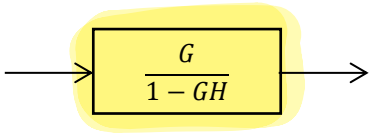

Ex 1. Find the transfer function $\frac{C(s)}{R(s)}$ for the block diagram shown in below figure.

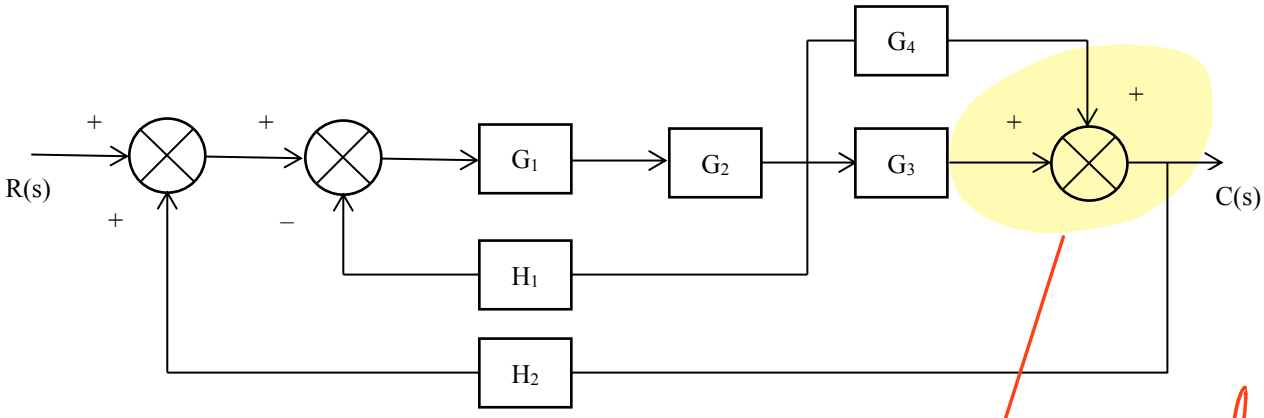

removed ∵ of no use now.

Solution:

Step 1: Reducing Cascading G_1 G_2 & Parallel G_3 & G_4

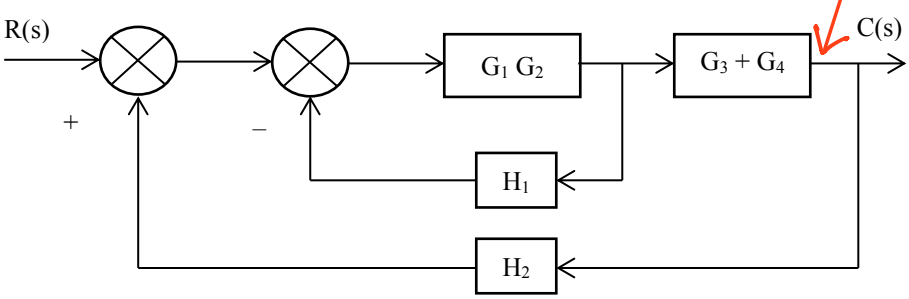

Step 2: Eliminate negative feedback path H_1

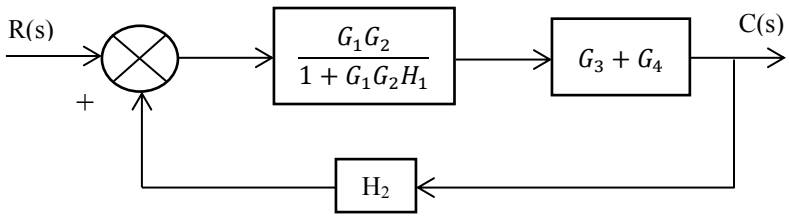

Step 3: Reducing Cascading and eliminating positive feedback.

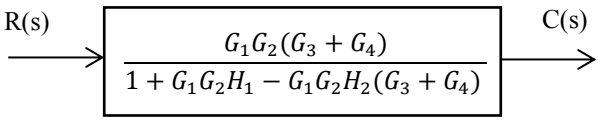

$$= \frac{\left(\frac{G_1G_2}{1+G_1G_2H_1}\right)(G_3+G_4)}{1-\left(\frac{G_1G_2}{1+G_1G_2H_1}\right)(G_3+G_4)H_2}$$

$$\frac{C(s)}{R(s)} = \frac{G_1G_2(G_3+G_4)}{1+\ G_1G_2H_1 - G_1G_2H_2(G_3+G_4)}$$

Ex 2. Find the transfer function for the block diagram shown in below figure.

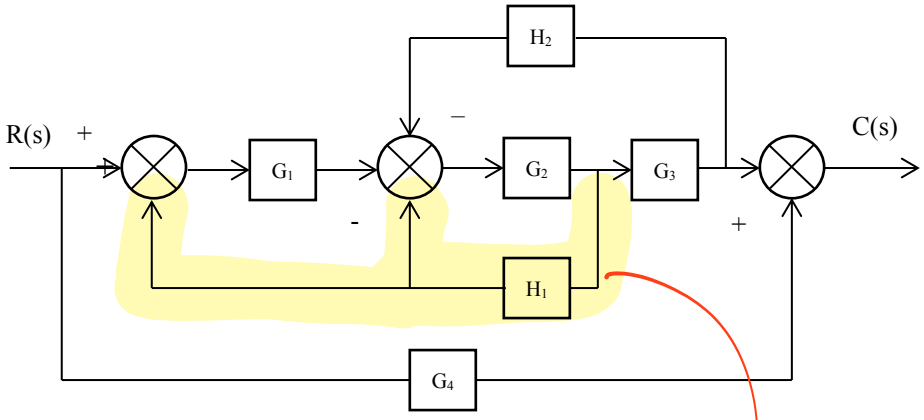

can split the block

Solution: Rearranging the above figure,

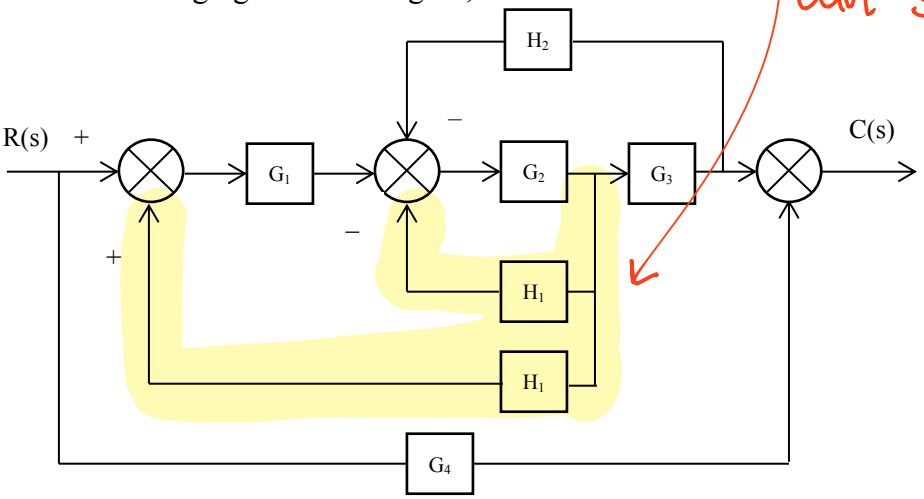

Step 1: Eliminating negative feedback path H_1

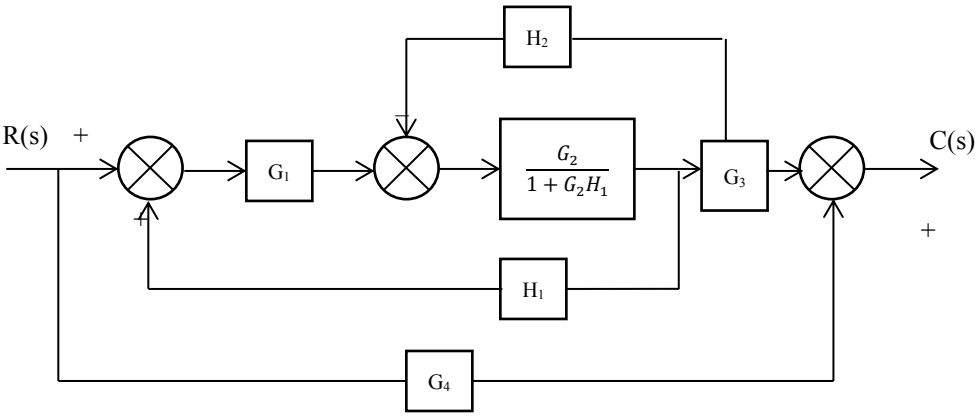

Step 2: Shifting Take off Point H_1 after G_3

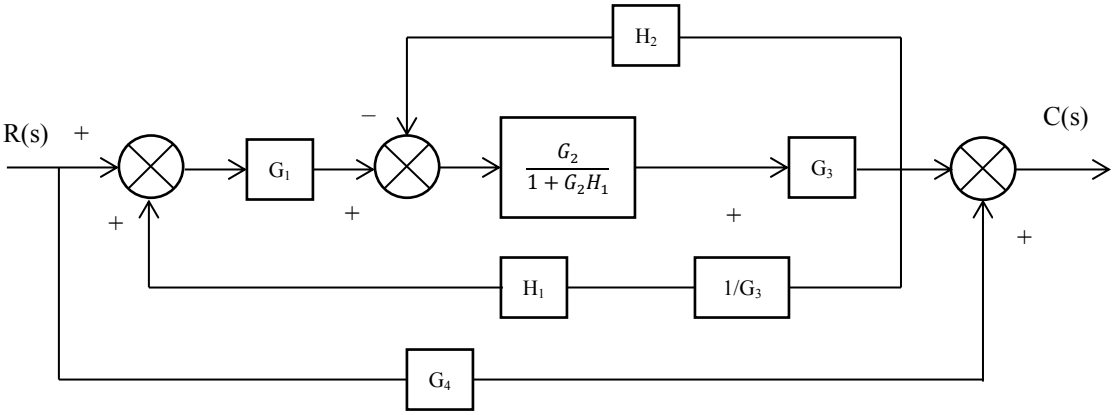

Step 3: Cascading and eliminating negative feedback path

$$\frac{\frac{G_2G_3}{1+G_2H_1}}{1+\frac{G_2G_3H_2}{1+G_2H_1}} \Rightarrow \frac{G_2G_3}{1+G_2H_1+G_2G_3H_2}$$

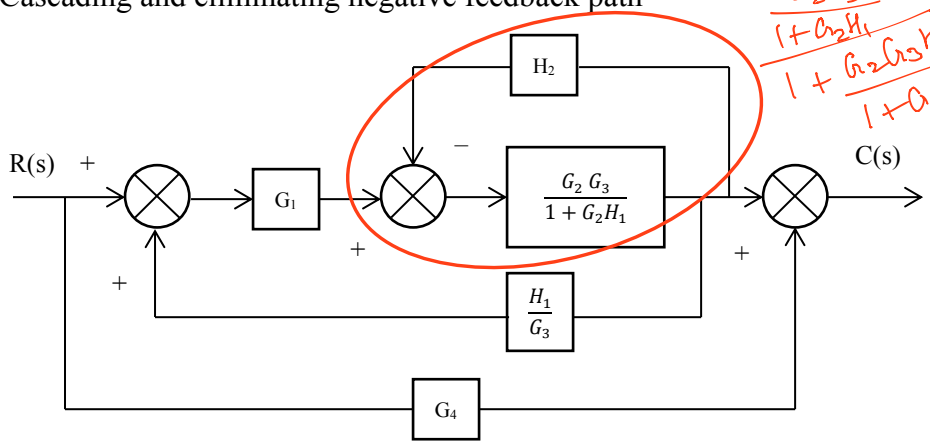

Step 4: Reducing Cascading

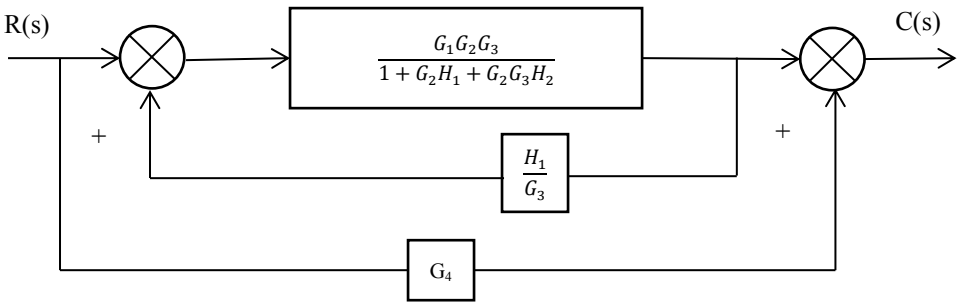

Step 5: Eliminating Positive feedback path,

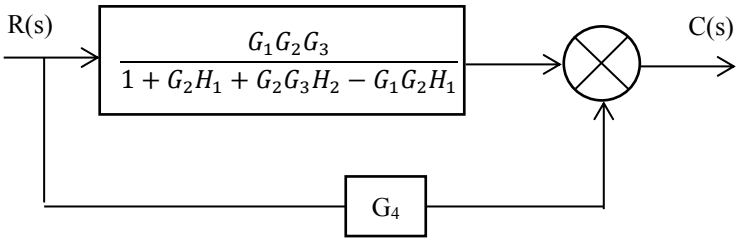

Step 6: Reducing parallel block G4

∵ G4 is a block & not feedback.

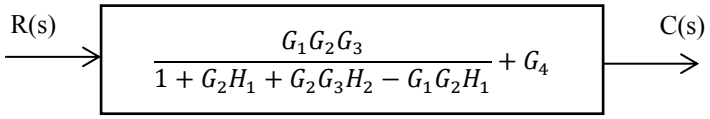

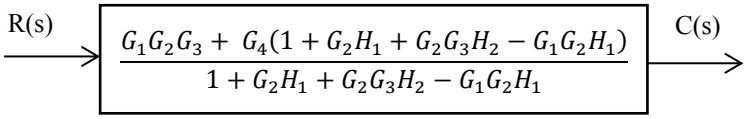

$$\frac{C(s)}{R(s)}=\frac{G_1G_2G_3+G_4(1+G_2H_1+G_2G_3H_2-G_1G_2H_1)}{1+G_2H_1+G_2G_3H_2-G_1G_2H_1}$$

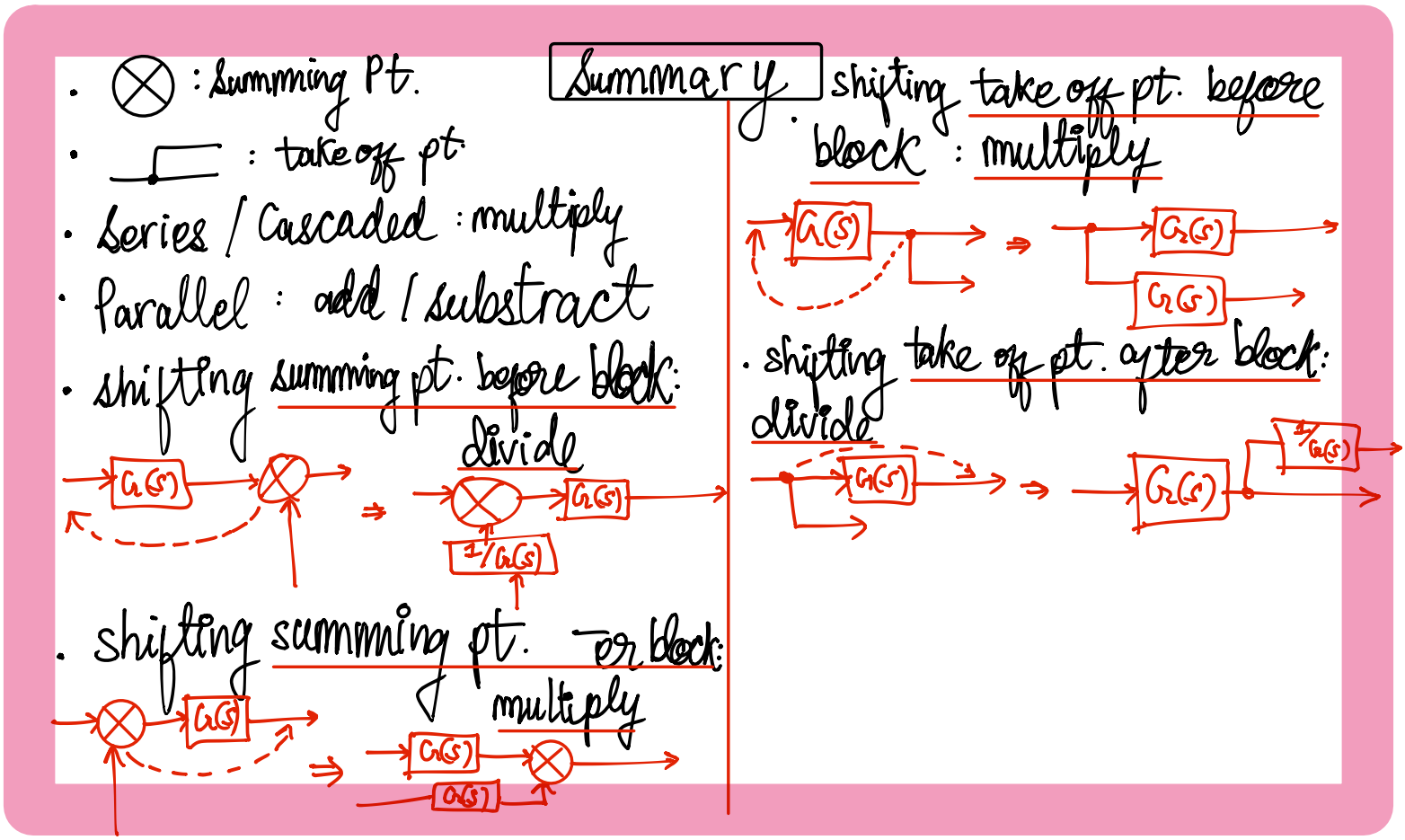

Ex 3. Find the transfer function for the block diagram shown in below figure.

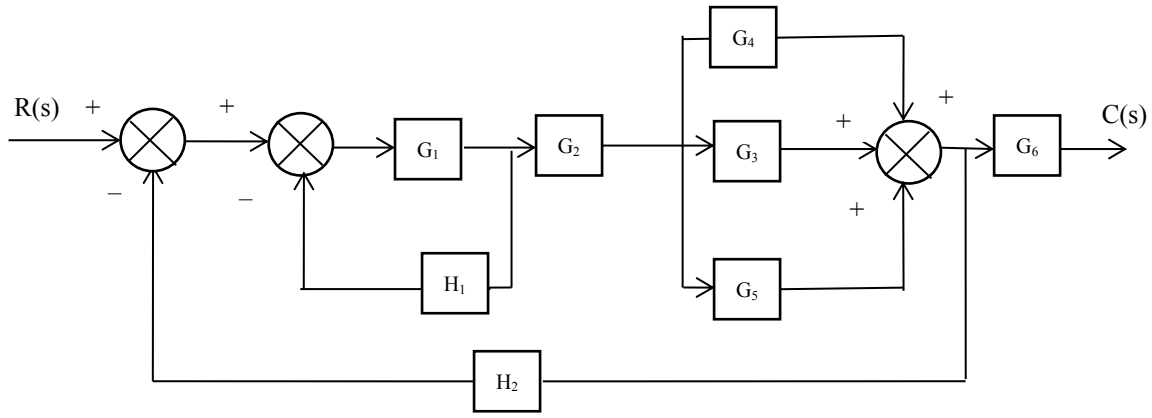

Solution:

Step 1: Reduce parallel blocks and negative feedback path H_1

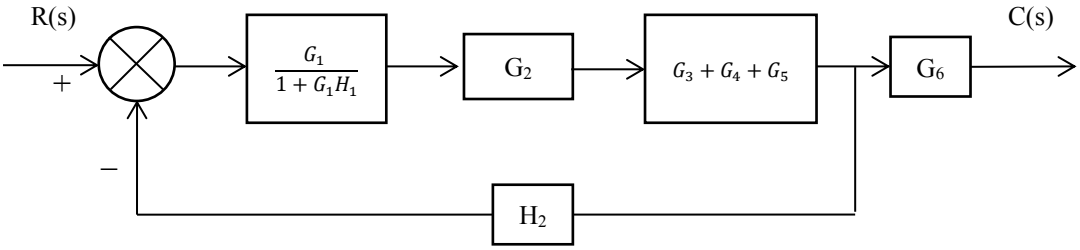

Step 2: Reducing Cascading Block

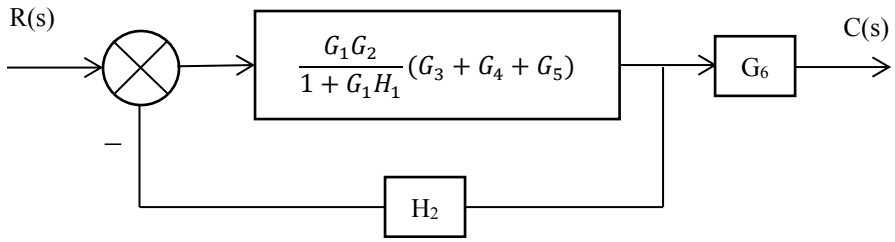

Step 3: Eliminating negative feedback path H_2

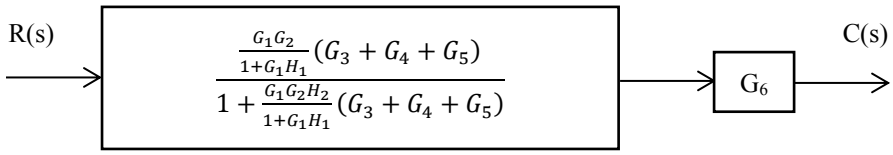

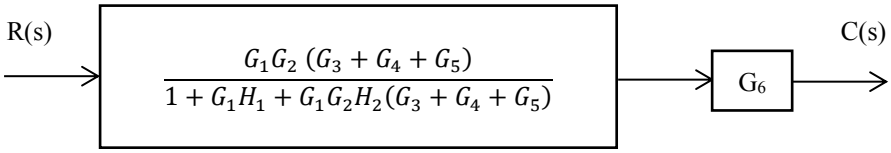

Step 4: Eliminating Cascading block

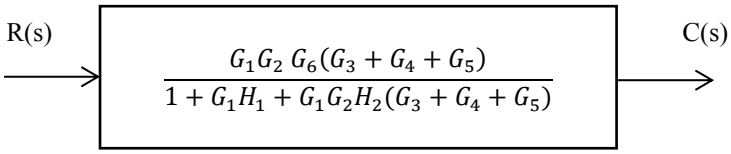

Ex 4. Simplify the block diagram shown in below figure and obtain the transfer function.

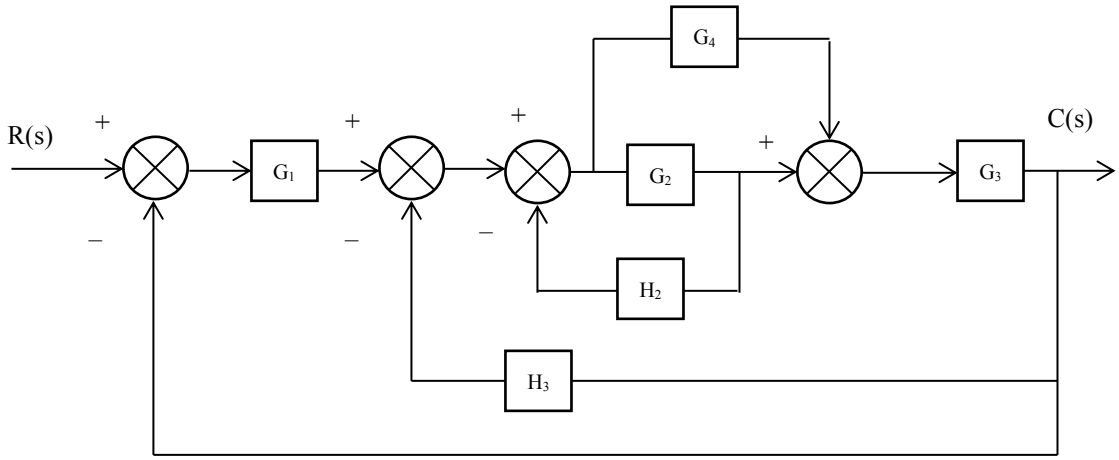

Solution:

Shifting Takeoff Point before G_2

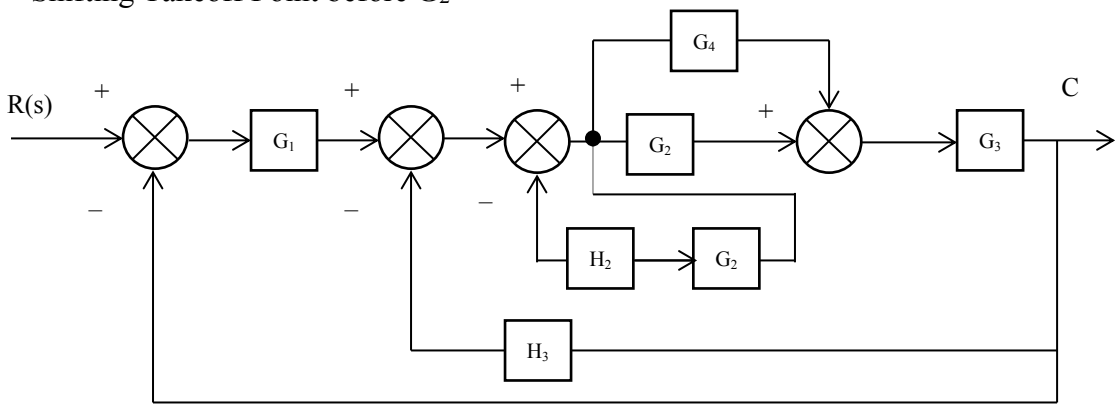

Reducing parallel block and cascading

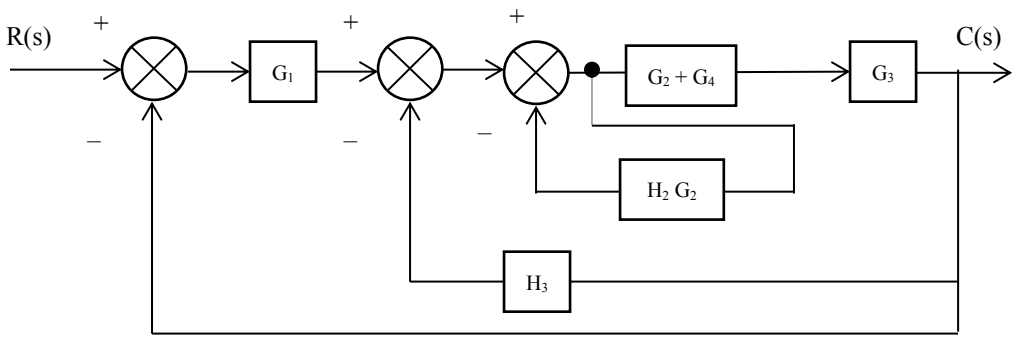

Shifting Takeoff Point after ($G_2 + G_4$)

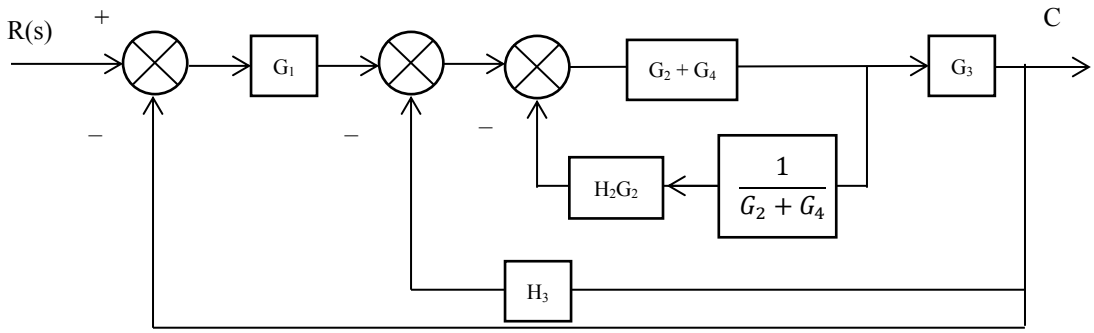

Reducing negative feedback and cascading G_3

$$= \frac{(G_2+G_4)}{1+G_2H_2\frac{1}{\cancel{(G_2+G_4)}}\cancel{(G_2+G_4)}} = \frac{(G_2+G_4)}{1+G_2H_2}$$

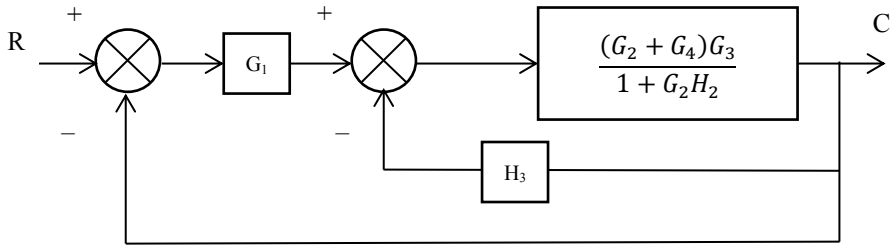

Reducing negative feedback

$$= \frac{\frac{(G_2+G_4)G_3}{1+G_2H_2}}{1+\frac{(G_2+G_4)G_3}{1+G_2H_2}(H_3)} = \frac{G_3(G_2+G_4)}{1+G_2H_2+G_3H_3(G_2+G_4)}$$

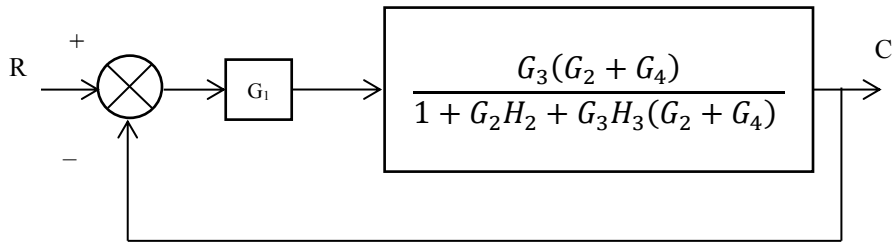

Cascading and eliminating negative feedback

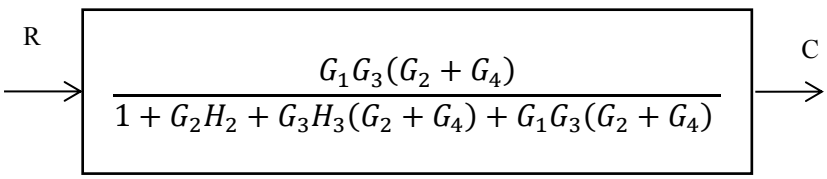

Ex 5. For the system represented by the block diagram shown in figure. Evaluate the closed loop transfer function when the input R is

i) At station I

ii) At station II

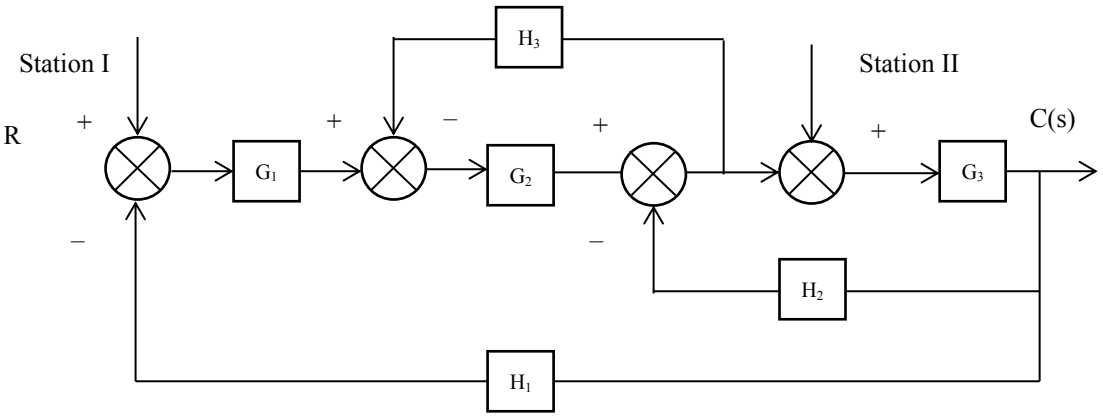

Consider the input R is at Station I and the input at Station II is made zero.

Let the output be C_1, since there is no input at Station II that summing point can be removed and resulting block diagram is shown in below.

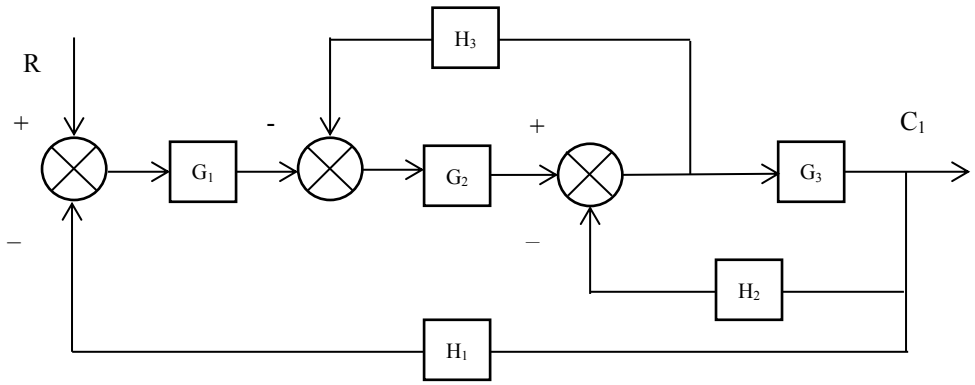

Shift the Take Off Point of feedback H_3 beyond G_3 and rearrange the branch points.

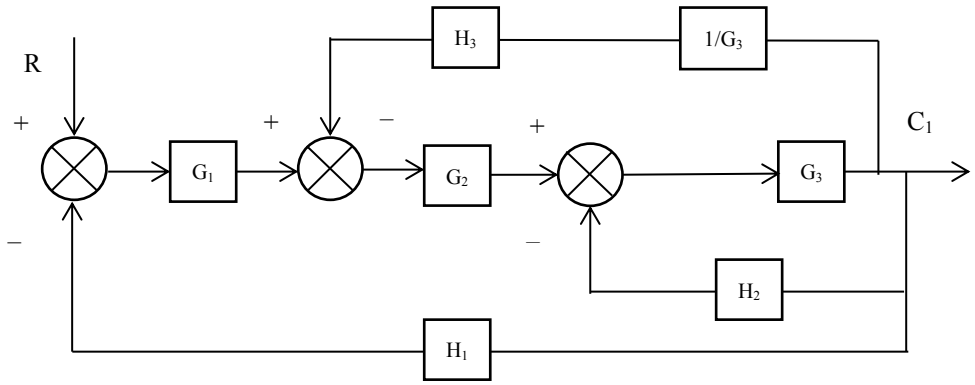

Eliminating the feedback H_2 and combining blocks in cascade

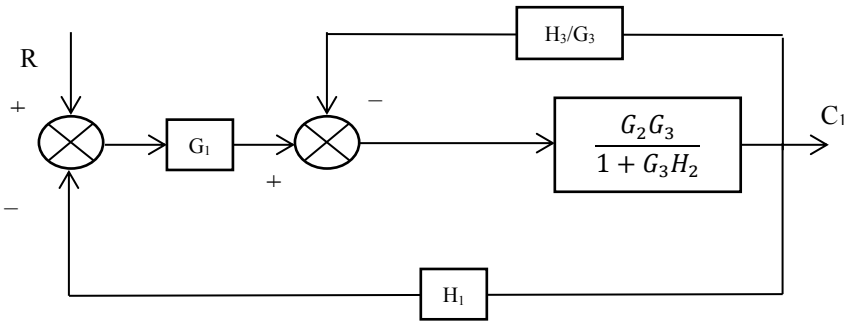

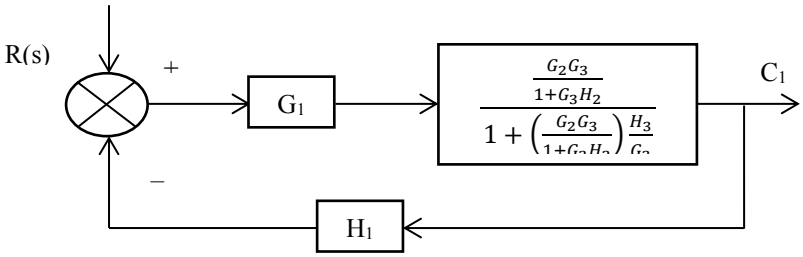

Combining the blocks in cascade

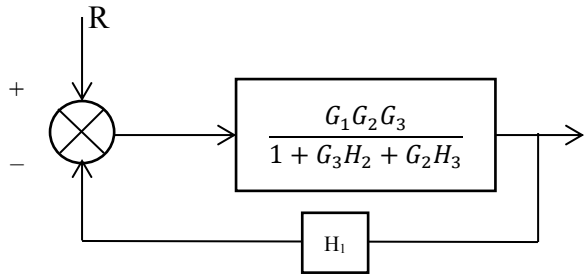

Eliminating feedback path H_1

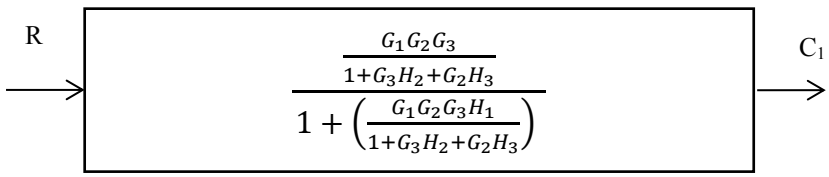

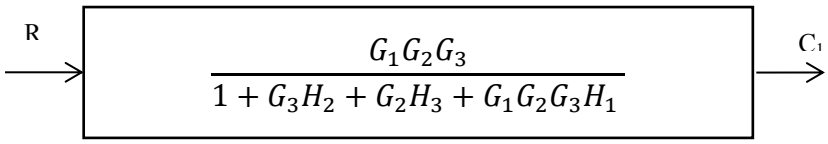

$$\frac{C_1(s)}{R_1(s)} = \frac{G_1G_2G_3}{1 + G_3H_2 + G_2H_3 + G_1G_2G_3H_1}$$

(ii) Consider the input R at Station II, the input at Station I is made zero. Let output be C_2. Since there is no input in Station I that corresponding summing point can be removed and a negative sign can be attached to be feedback path gain H_1.

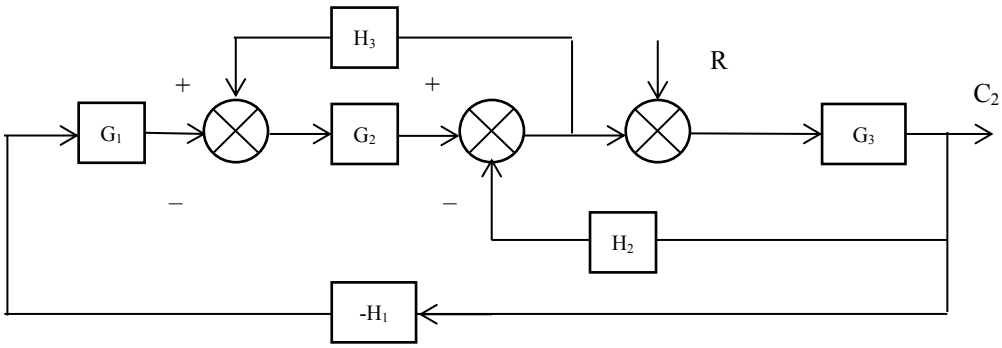

Combining the blocks in cascade, shifting the summing point of H_2 before G_2 and rearranging the branch points.

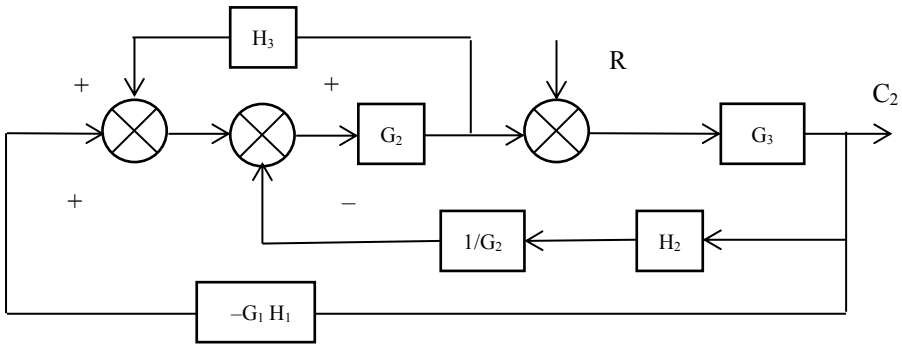

Interchanging summing and combining the blocks in cascade.

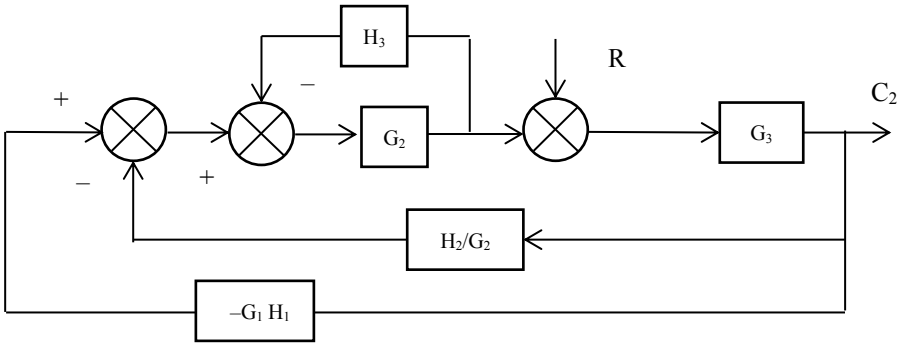

Combining parallel blocks and eliminating feedback path.

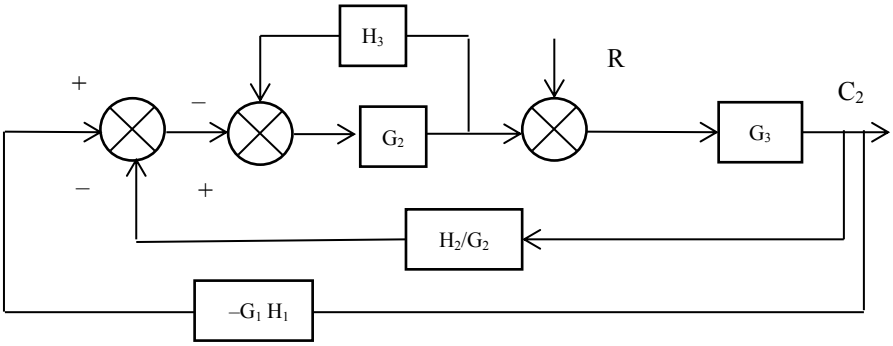

Combining the blocks in cascade

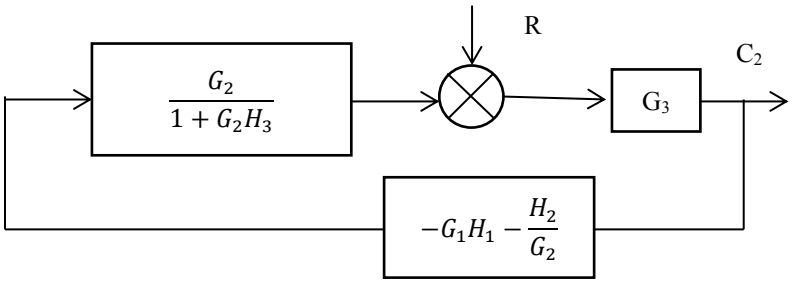

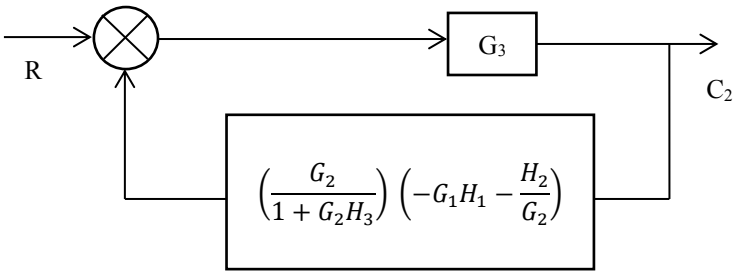

Eliminating Feedback path

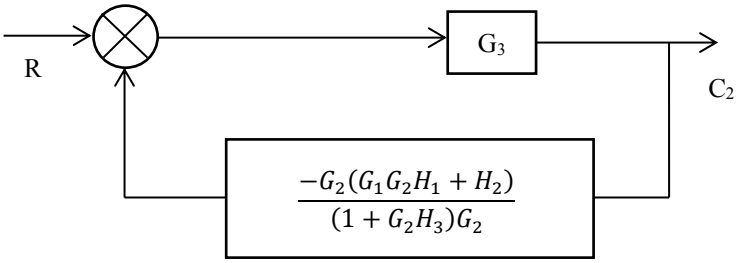

$$\frac{C_2}{R} = \frac{G_3}{1 - \left(\frac{-(G_1G_2H_1+H_2)}{1+G_2H_3}\right)G_3}$$

$$\frac{C_2}{R} = \frac{G_3}{\left(\frac{1+G_2H_3+G_3(G_1G_2H_1+H_2)}{1+G_2H_3}\right)}$$

$$\frac{C_2}{R} = \frac{G_3(1+G_2H_3)}{1+G_2H_3+G_3(G_1G_2H_1+H_2)}$$

The transfer function of the system with input at Station I is

$$\frac{C_1}{R} = \frac{G_1G_2G_3}{1+G_3H_2+G_2H_3+G_1G_2G_3H_1}$$

The transfer function of the system with input at Station II is

$$\frac{C_2}{R} = \frac{G_3(1+G_2H_3)}{1+G_2H_3+G_3(G_1G_2H_1+H_2)}$$

Ex 6. For the system represented by the block diagram shown in figure, find $\frac{C_1}{R_1}$ and $\frac{C_2}{R_1}$

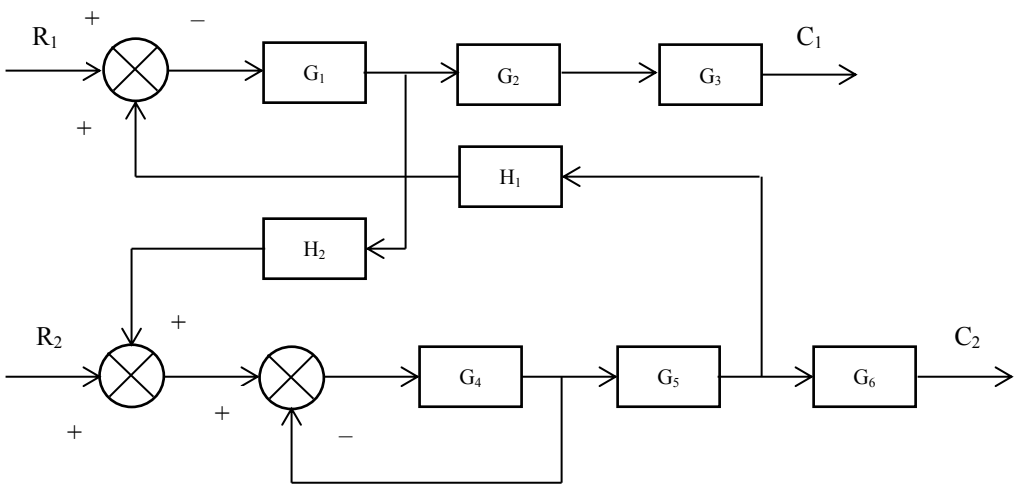

Solution:

Case 1: To find $\frac{C_1}{R_1}$

In this case set $R_2 = 0$ and consider only one output C_1. Hence we can remove the summing point which adds R_2 and need not consider G_6, since G_6 is on the open path. Eliminating the feedback path.

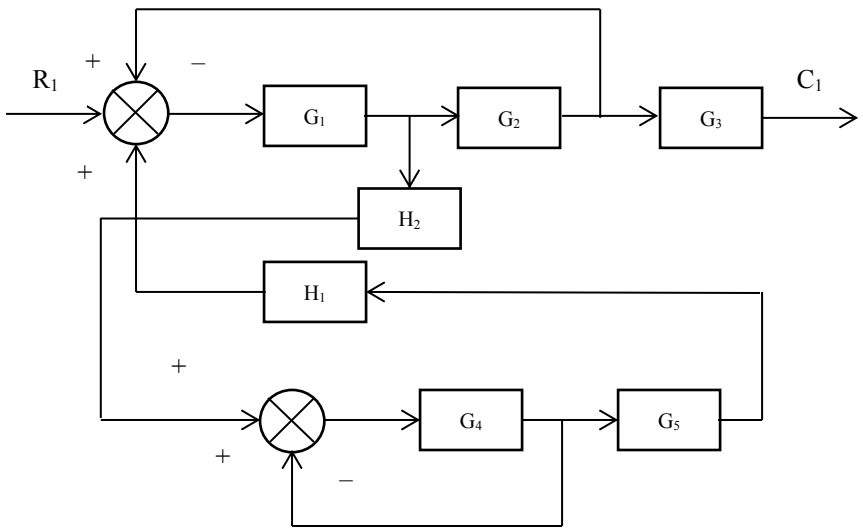

Combining the blocks in cascade and splitting the summing point.

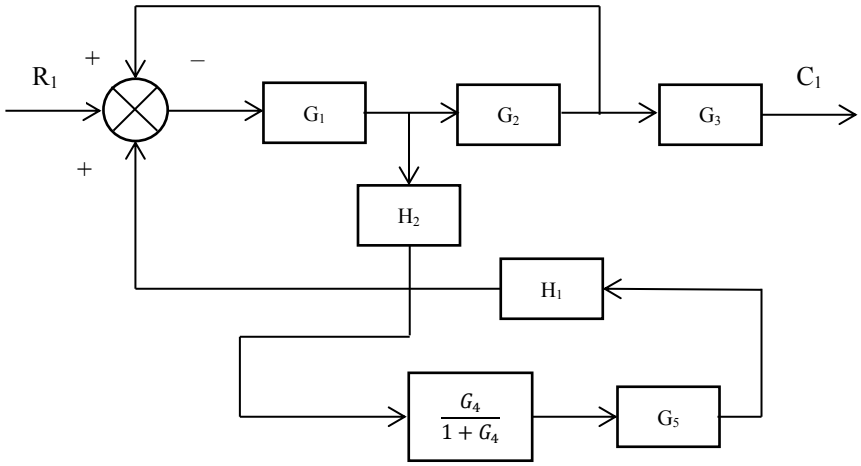

Eliminating the feedback path

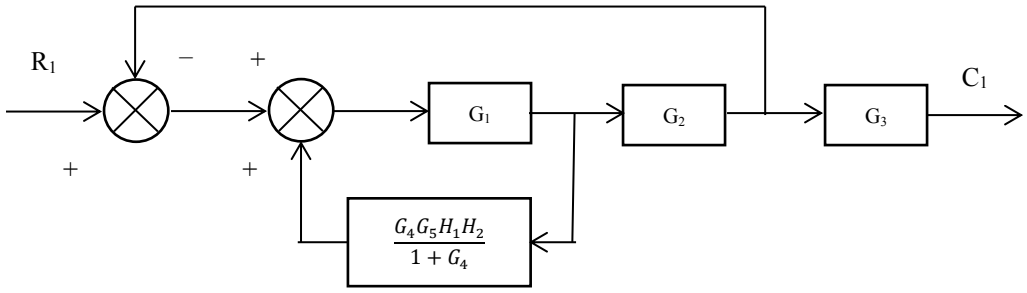

Combining the blocks in cascade

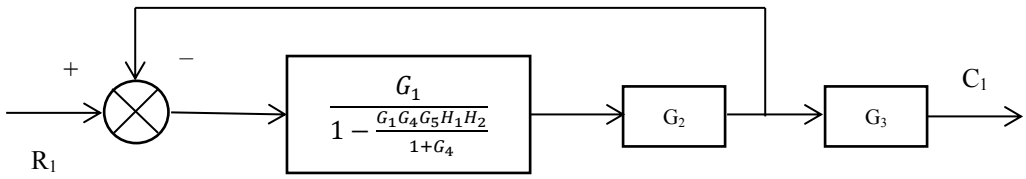

Eliminating the feedback path

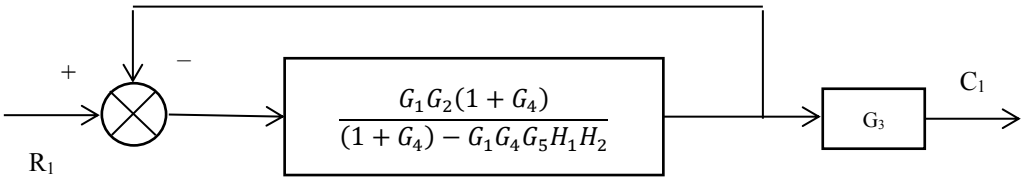

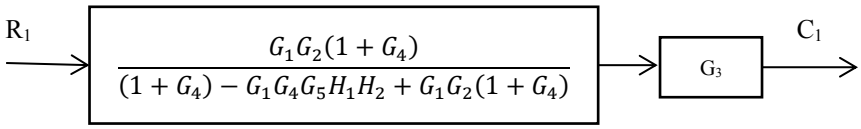

$$\frac{C_1}{R_1}=\frac{G_1G_2G_3(1+G_4)}{(1+G_4)(1+G_1G_2)-G_1G_4G_5H_1H_2}$$

Case 2: To find $\frac{C_2}{R_1}$

In this case set $R_2 = 0$ and consider only one output C_2. Hence we can remove the summing point which adds R_2 and need not consider G_3. Since G_3 is on the open path. The resulting block diagram is

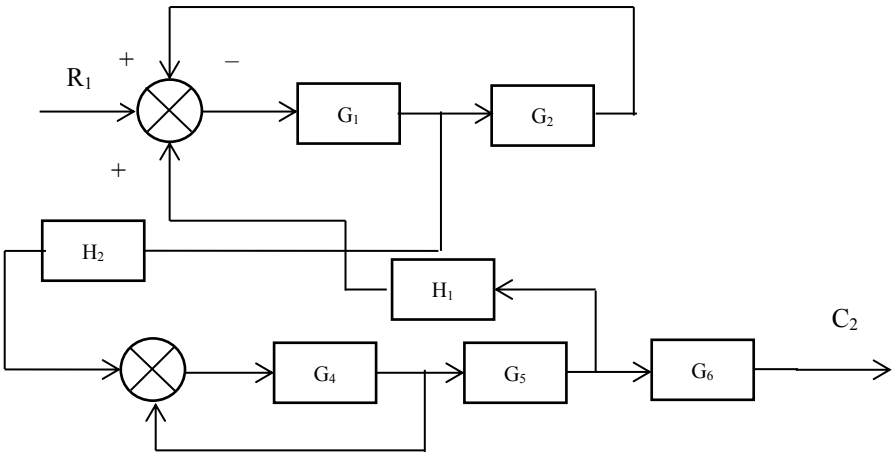

Eliminate the feedback path

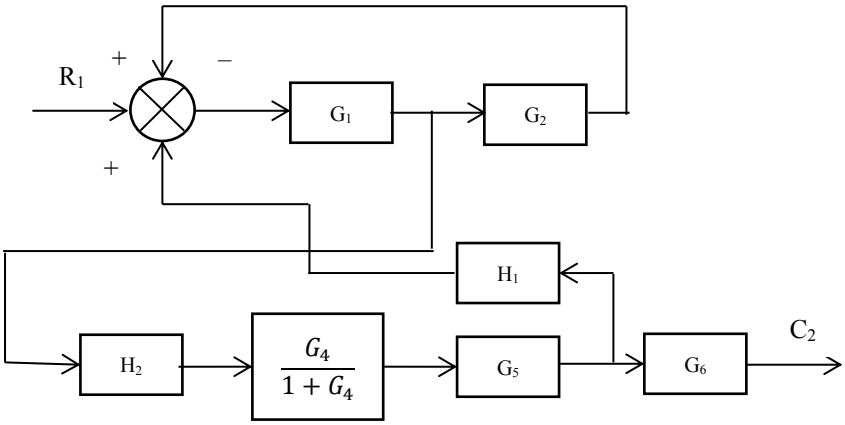

Combining blocks in cascade and splitting the summing point.

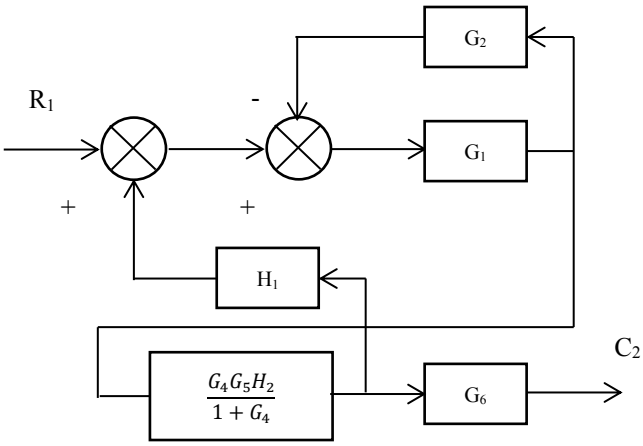

Eliminating the feedback path.

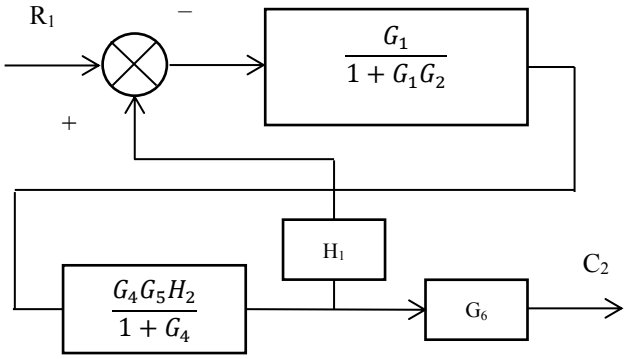

Combining the blocks in cascade.

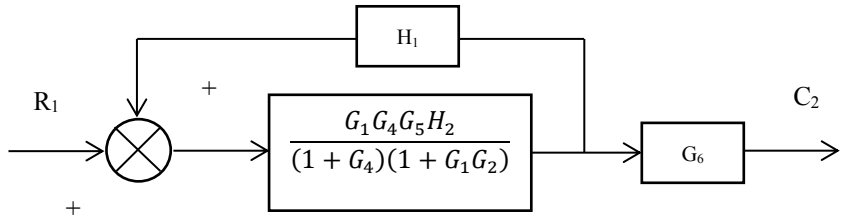

Combining the blocks in cascade

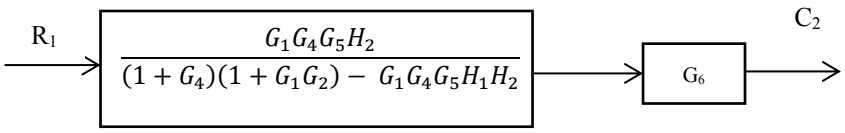

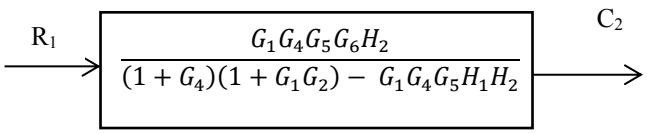

$$\frac{C_2}{R_1} = \frac{G_1G_4G_5G_6H_2}{(1+G_4)(1+G_1G_2)-\ G_1G_4G_5H_1H_2}$$

Ex 7. Using block diagram reduction technique, find closed loop transfer function of the system whose block diagram is shown in figure. [Example of interchanging summing point]

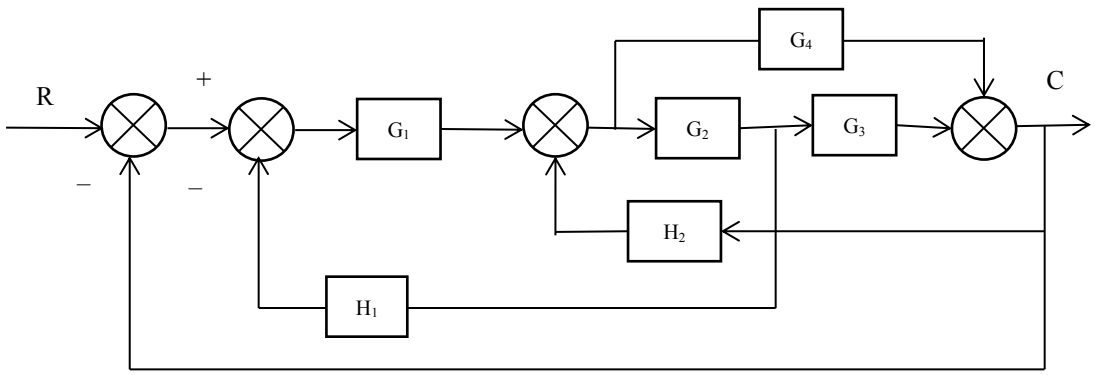

Solution: Moving the Takeoff point (branch point) before the block G_2

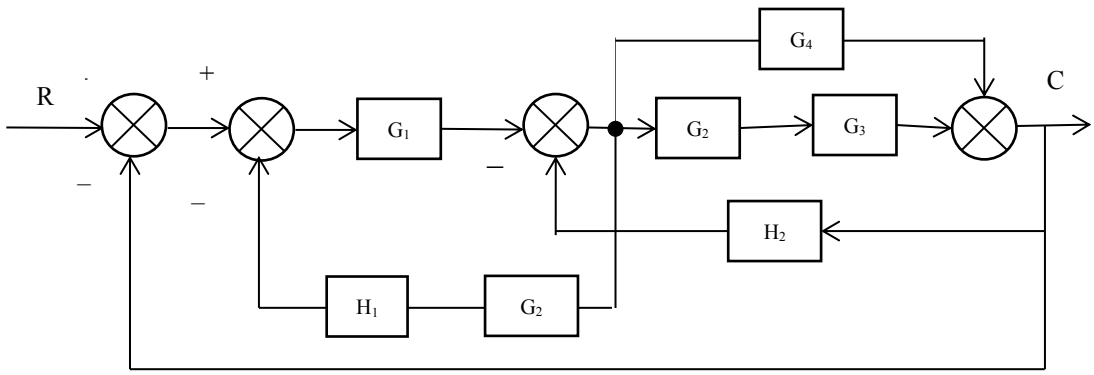

Combining the blocks in cascade and eliminating parallel blocks

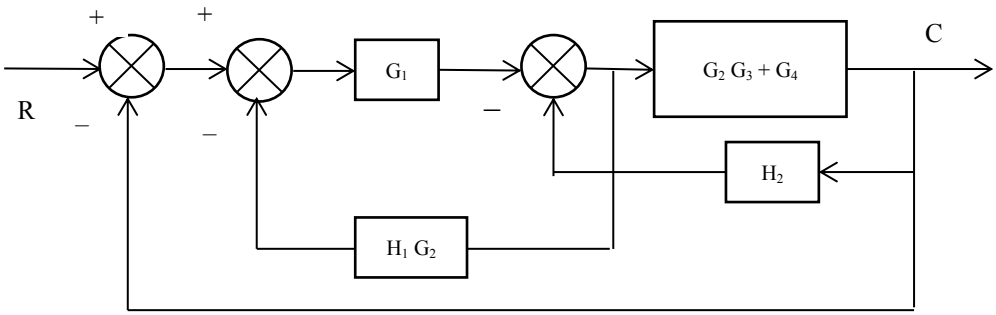

Moving summing point before the block.

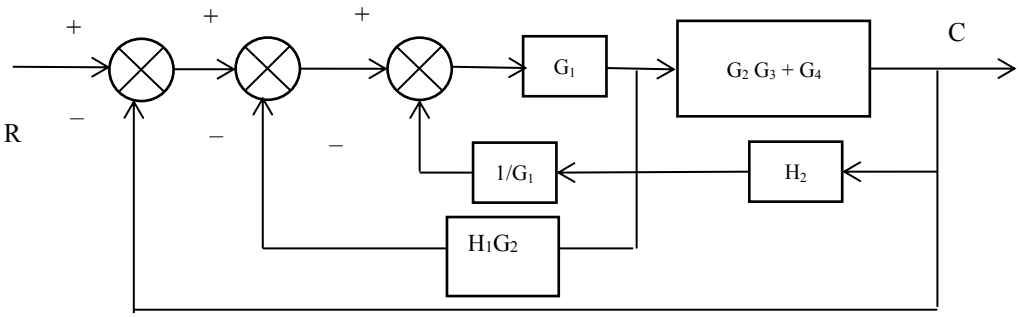

Interchanging summing points and modifying branch points.

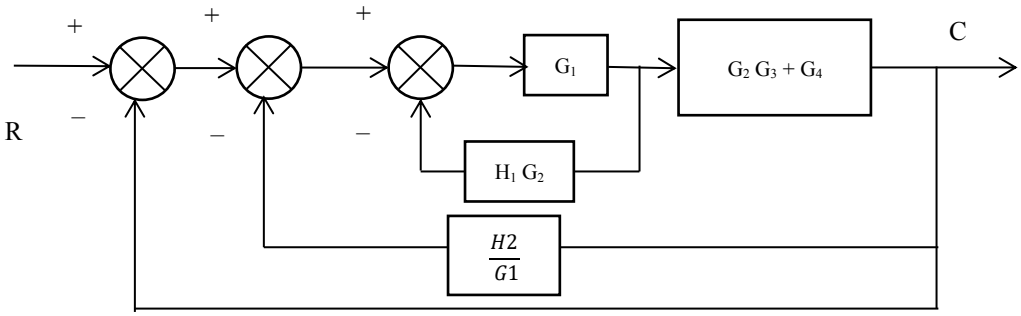

Eliminating the feedback path and combining blocks in cascade.

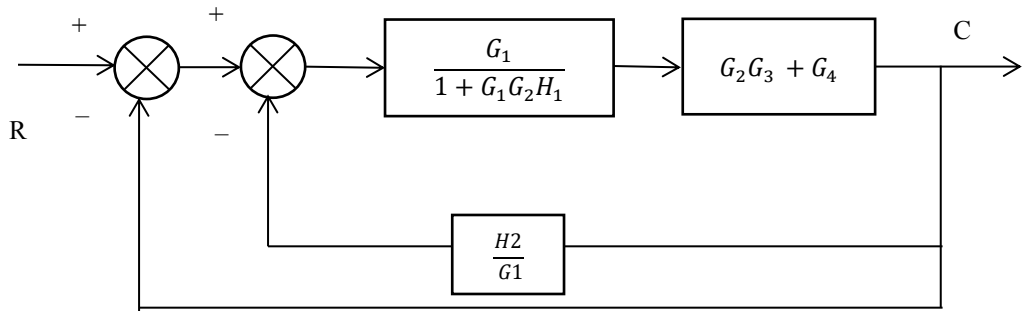

Eliminating the feedback path

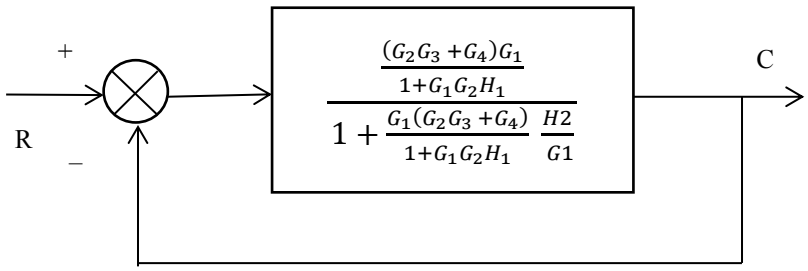

Eliminating the unity feedback path

$$\frac{C}{R} = \frac{G_1G_2G_3 + G_1G_4}{1 + G_1G_2H_1 + G_2G_3H_2 + G_4H_2 + G_1G_2G_3 + G_1G_4}$$

Ex 8. The block diagram of a closed loop system shown in figure using the block diagram reduction technique, determine the closed loop transfer function $\frac{C(s)}{R(s)}$ [Example of splitting summing point].

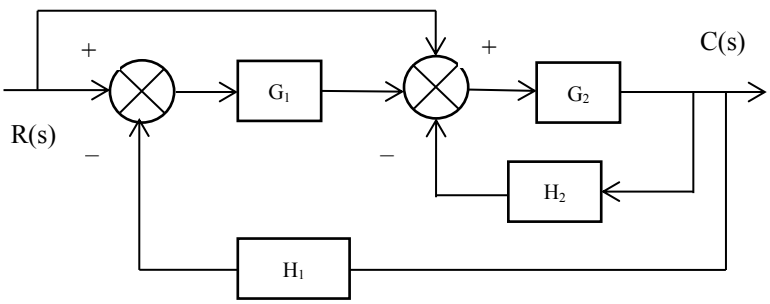

Splitting the summing point

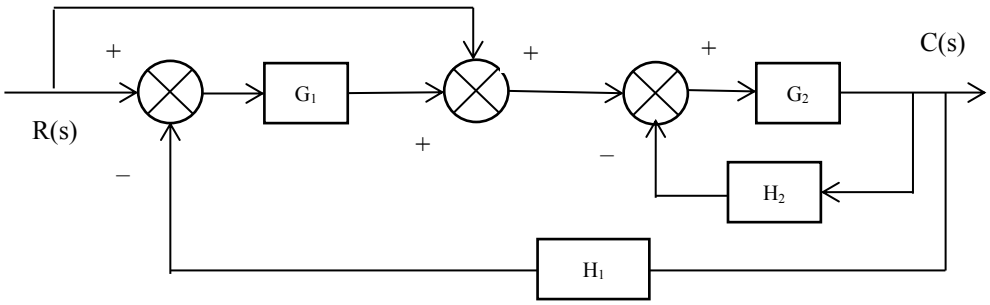

Eliminating the feedback path

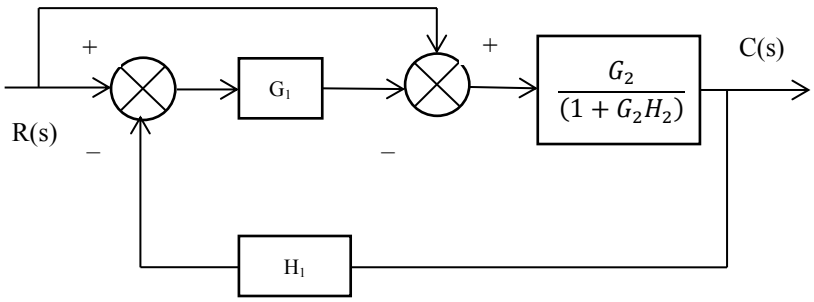

Moving the summing point after the block

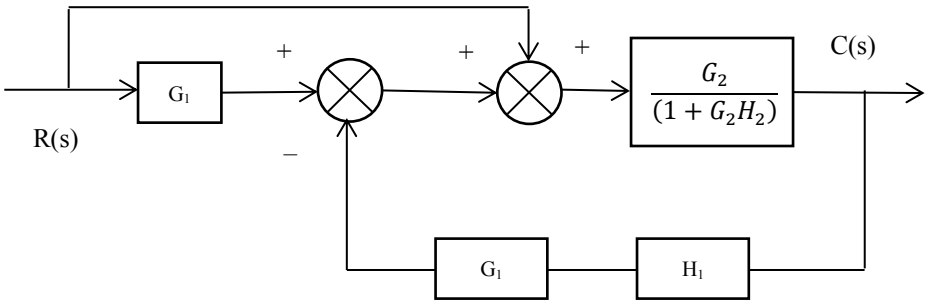

Interchanging the summing points and combining the blocks in cascade.

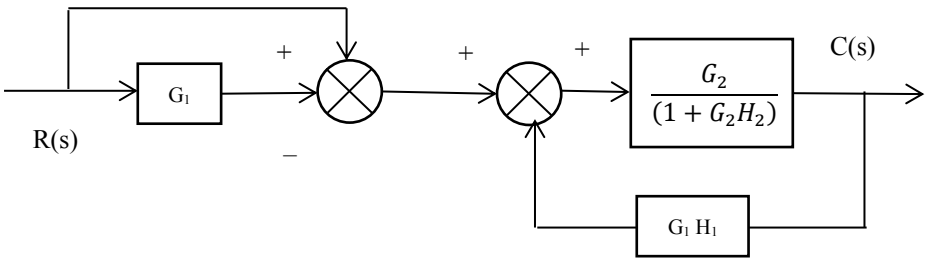

Eliminating the feedback path

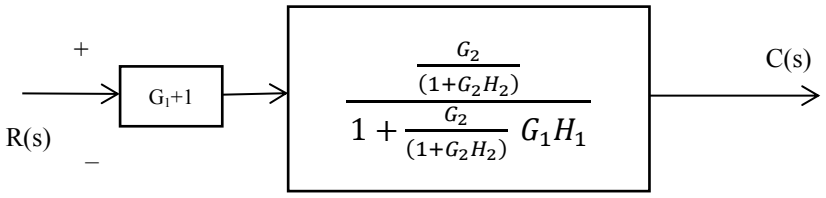

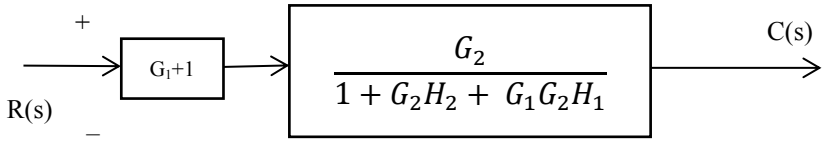

$$\frac{\boldsymbol{C(s)}}{\boldsymbol{R(s)}}=\frac{\boldsymbol{G_2(G_1+1)}}{\boldsymbol{1+G_2H_2+\ G_1G_2H_1}}$$

Ex 9. For the system shown in figure, determine $\frac{I_O(s)}{V_i(s)}$ by block diagram reduction technique.

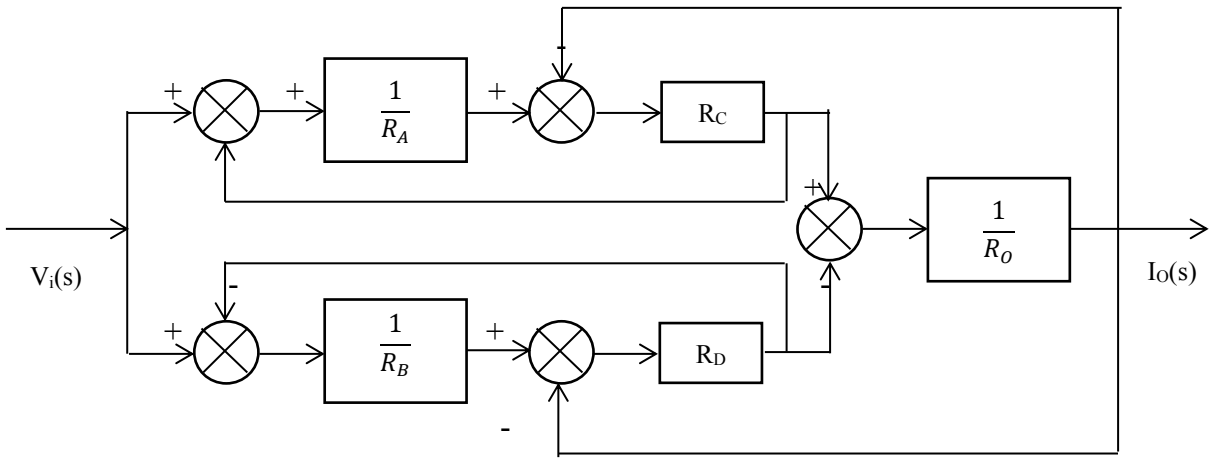

Solution: Shifting summing point before block $\frac{1}{R_A}$ & $\frac{1}{R_B}$.

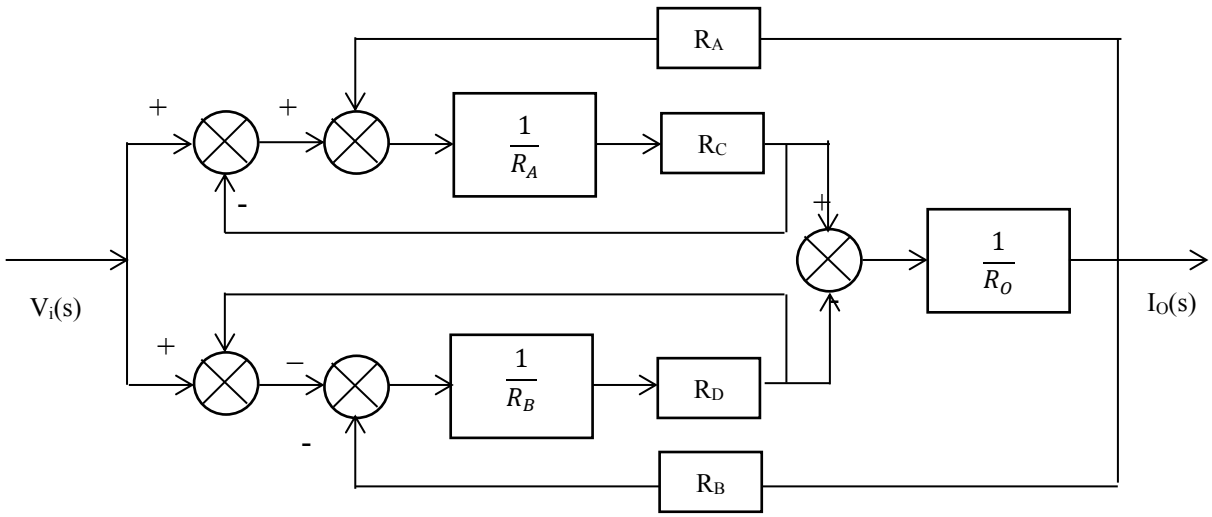

Combining summing point

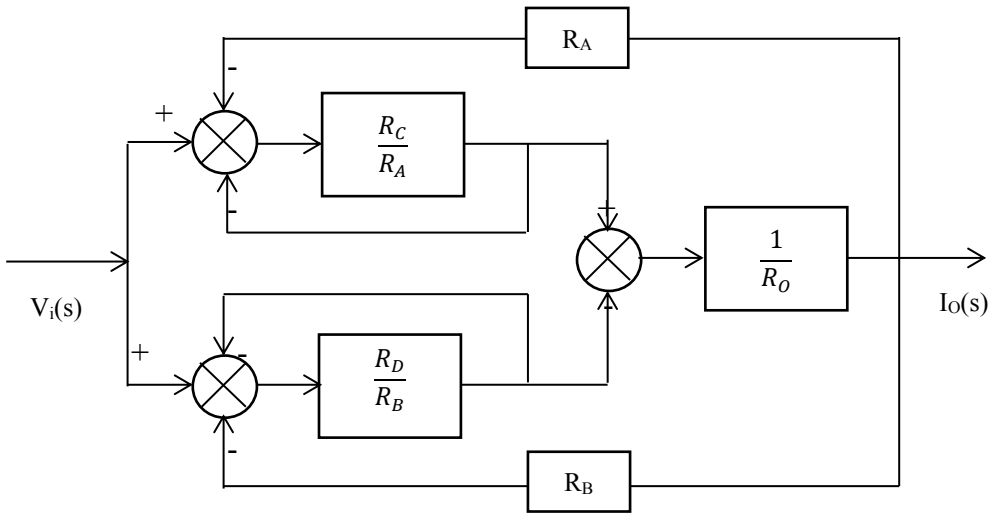

Eliminating feedback loop

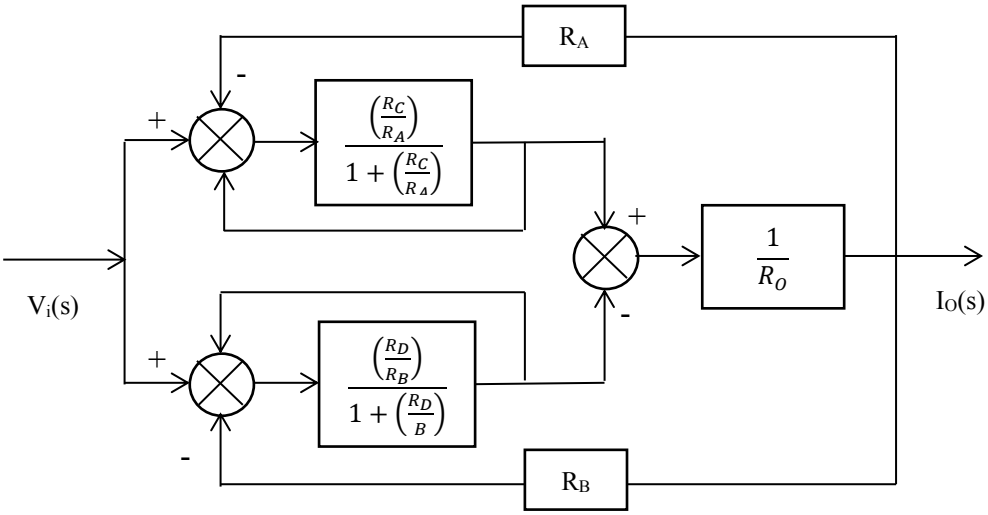

Shifting summing point after blocks $\frac{R_C}{R_A+R_C}$ & $\frac{R_D}{R_B+R_D}$

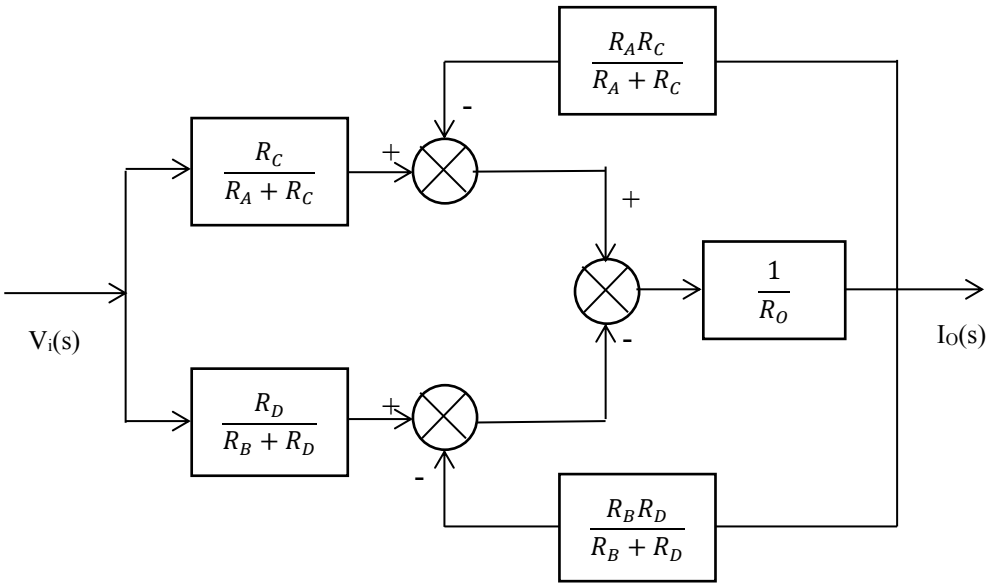

Combine 3 summing points and reduce.

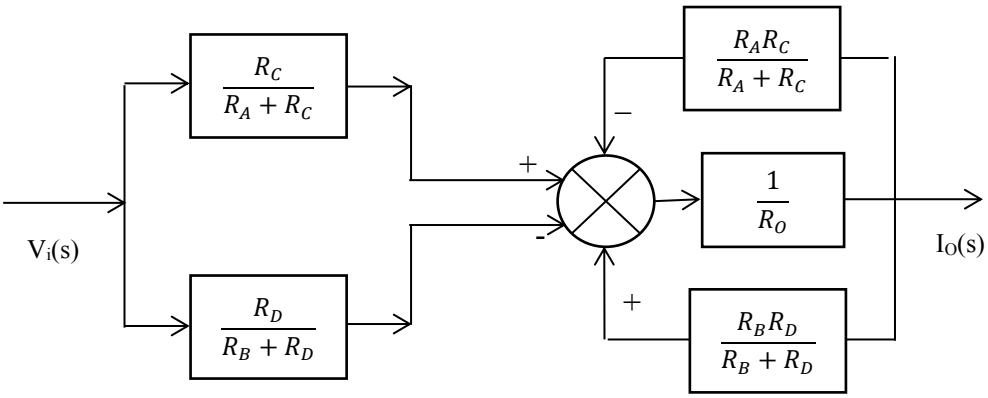

Reducing parallel combination and feedback.

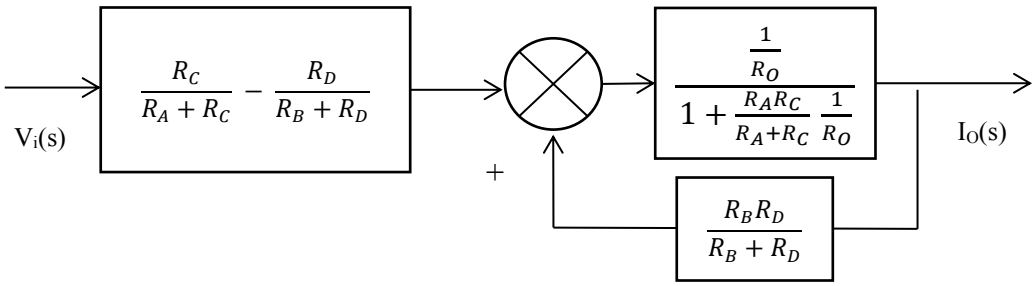

Eliminating Feedback

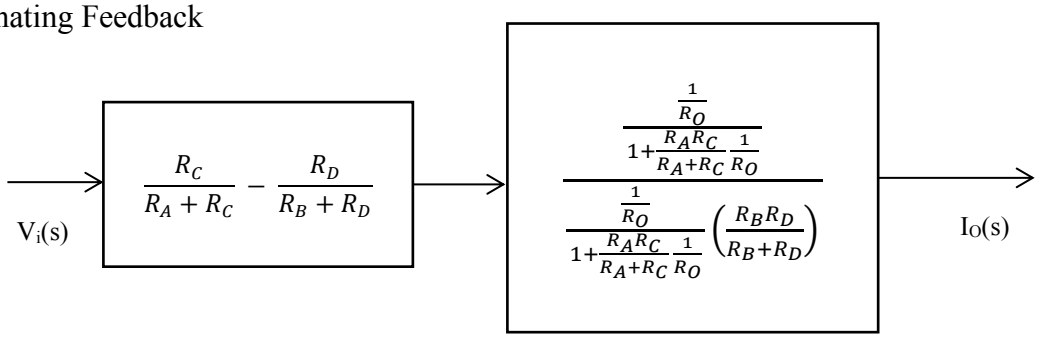

$$\frac{\boldsymbol{I_O(s)}}{\boldsymbol{V_i(s)}} = \frac{\boldsymbol{R_CR_B - R_AR_D}}{\boldsymbol{(R_OR_A + R_OR_C + R_AR_C)(R_B + R_D) - R_BR_D(R_A + R_C)}}$$

Ex 10. Obtain $\frac{C(s)}{R(s)}$ of the system shown in figure by using block diagram reduction rules.

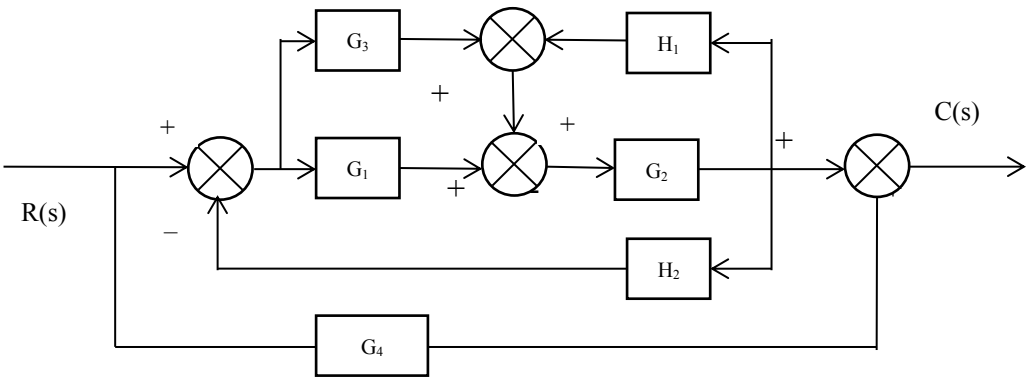

Solution:

G_3 and G_1 blocks are in parallel and combining the summing points.

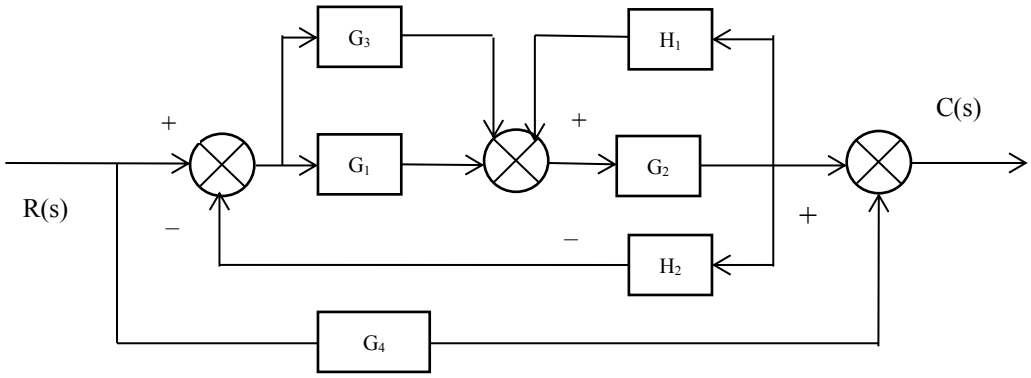

Eliminate parallel block and feedback path

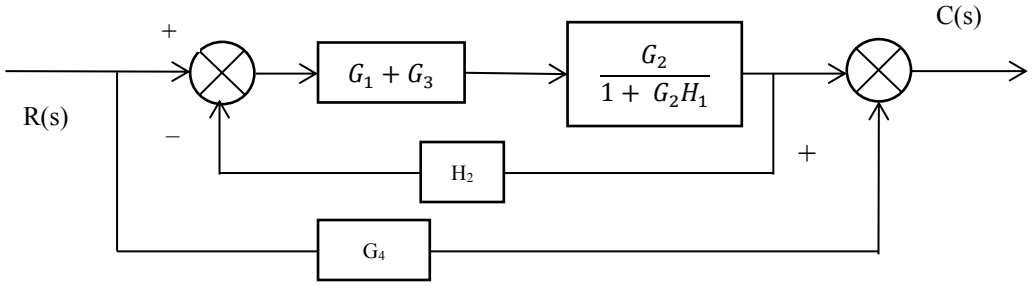

Eliminate Feedback and cascading

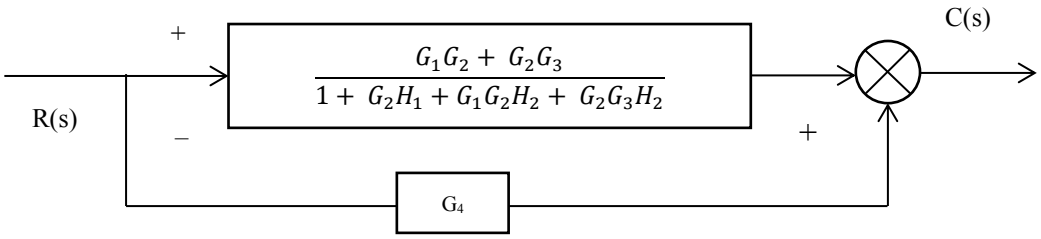

Reducing Parallel block.

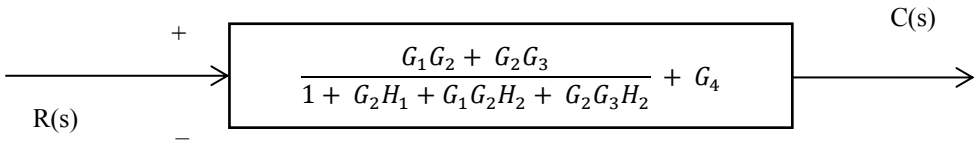

Multiple Input Single Output (MISO)

Ex 1. Find the output of the system shown in figure. $\frac{C}{R}$ *and* $\frac{C}{X}$

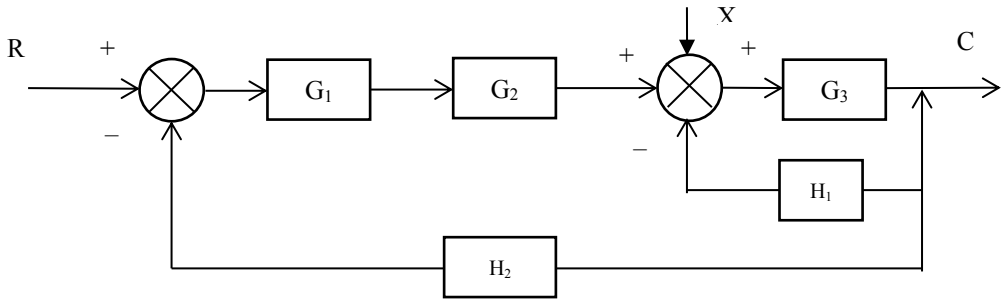

To find $\frac{C}{R}$, putting x = 0

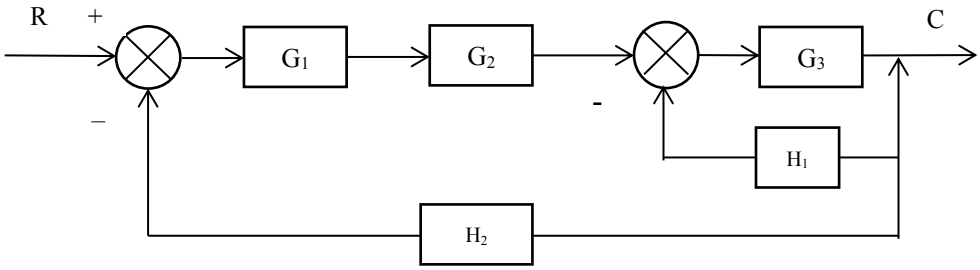

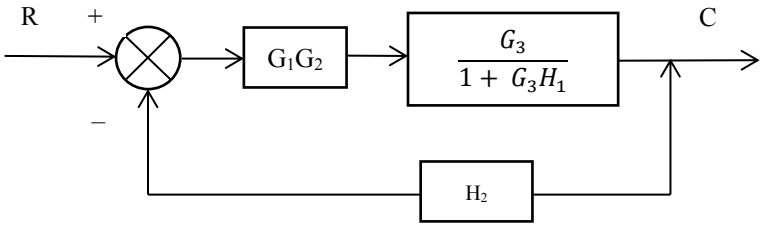

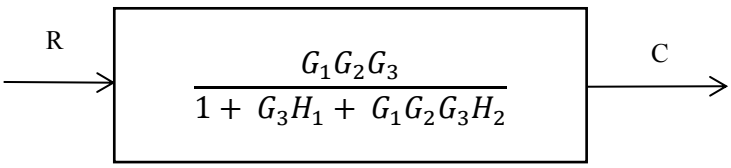

$$\frac{C(s)}{R(s)} = \frac{G_1G_2G_3}{1+H_1G_3+G_1G_2G_3H_2}$$

To find $\frac{C}{X}$ Putting R = 0

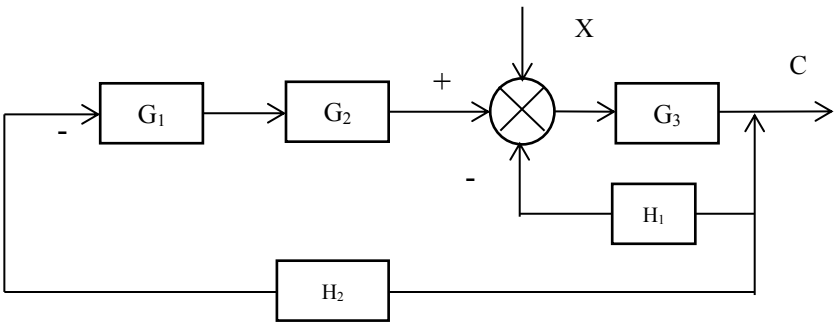

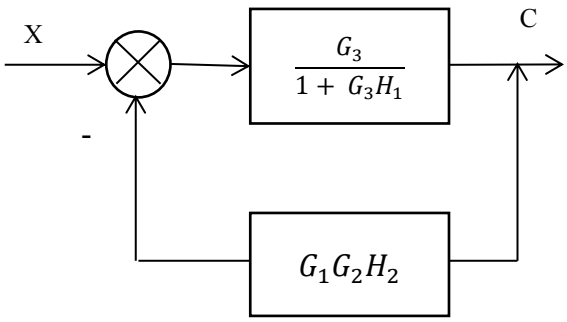

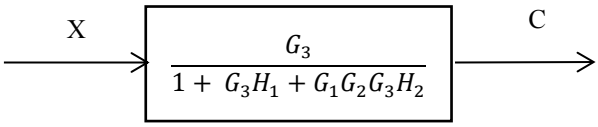

$$\frac{C(s)}{X(s)} = \frac{G_3}{1+H_1G_3+G_1G_2G_3H_2}$$

3.3 Signal Flow Graph(SFG)

The Signal flow graph is used to represent the control system graphically and it was developed by S J Mason. A Signal Flow Graph is a pictorial representation of a system and it displays graphically the transmission of signals in a system. By taking Laplace Transform, time domain differential equations governing a control system can be transferred to a set of algebraic equations in S – domain. The signal flow graph of the system can be constructed using these equations. It consists of a network graph in which nodes represent system variable. The nodes are connected by directed branches, each branch connected between two nodes act as a signal

multiplier. Each branch has a gain or a transmittance. When a signal passes through a branch, it gets multiplied by the gain of the branch. Note that the signal flows in only one direction. The direction of signal flow is indicated by an arrow placed on the branch and the multiplication factor is indicated along the branch.

It should be noted that signal flow approach and the block diagram approach yield the same information. The advantage in signal flow graph method is that, using Mason's gain formula the overall gain of the system can be computed easily. This method is simpler than the previous block diagram reduction technique.

Basic Terminology

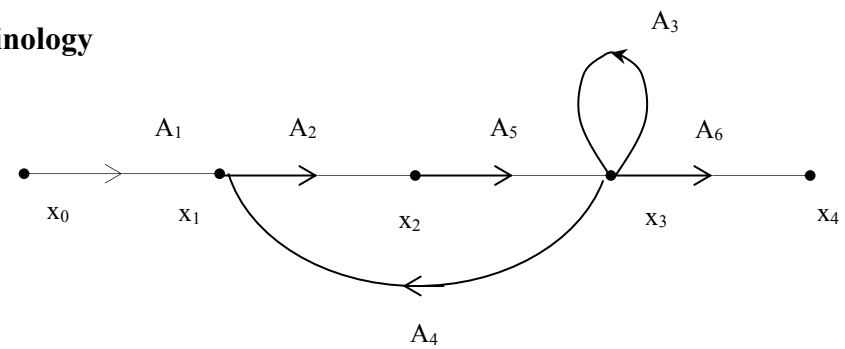

- Node: (Input node / Source node, Independent node): It is a node which has only outgoing branches. In the above figure, x_0 is input node.

- Output node (Sink node or Dependent node): The node which has only incoming branches. Example: x_4

- Mixed node: Mixed node is node which has both incoming and outgoing branches. Example: x_1, x_2, and x_3.

- Path: A path is a collection of continuous connected branches in the same direction.

- Forward Path: It is a path from an input node to an output node and along which no node is encountered more than once.

  Ex: $x_0 - x_1 - x_2 - x_3 - x_4$

- Forward Path Gain: It is the product of branches gains which encountered in transferring a forward path.

  Ex: $A_1 A_2 A_6 A_5$

- Loop: It is a path which originates and terminates at the same node and along which no other node is encountered more than once.

- Loop Gain: It is the product of branch gains which are encountered in transferring loop.

  Example: $A_2\ A_5\ A_4$

  A_3 is Self loop.

- Non touching loops: Two loops are said to be non-touching loop, if they do not have any common node.

3.3.1 Mason's Gain Formula

It is used to determine the relationship between an input variable and an output variable of the signal flow graph.

According to Mason's gain formula, the overall gain between an input node and an output node is given by

$$M = \frac{\sum_{K=1}^{N} P_K \Delta_K}{\Delta}$$

Where P_K = path gain of the Kth forward path.

Δ = Determinant of the graph & is given by

$\Delta = 1 - \sum L_1 + \sum L_2 - \sum L_3 + \ldots\ldots\ldots$

$\sum L_1$ = Sum of the product of loop gains of all individual loops in the graph.

$\sum L_2$ = Sum of the product of loop gains of all possible combinations of 2 non-touching loops.

$\sum L_3$ = Sum of the product of loop gains of all possible combination of 3 non-touching loop.

Δ_K = It is the determinant of that part of the graph which is non-touching loop With the Kth forward path.

N = total number of forward paths.

Ex1. Obtain the transfer function using Mason's gain formula for the signal flow graph shown in figure.

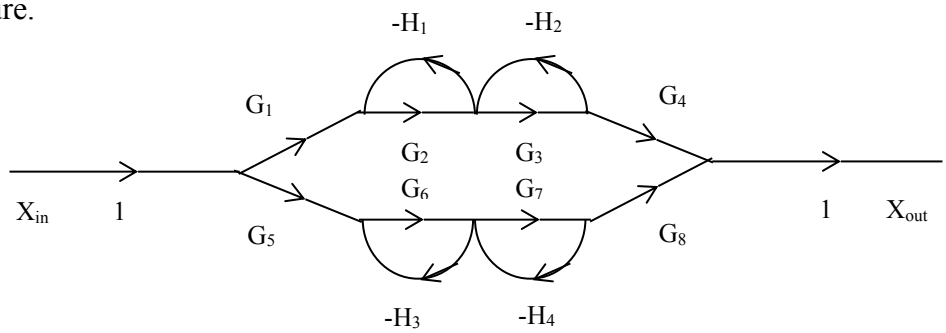

There are 2 forward paths.

The forward path gains are

$P_1 = G_1\ G_2\ G_3\ G_4$

$P_2 = G_5\ G_6\ G_7\ G_8$

There are 4 individual loops

$L_{1a} = -H_1G_2$

$L_{1b} = -H_2G_3$

$L_{1c} = -H_4G_7$

$L_{1d} = -H_3G_6$

$\sum L_1 = -H_1G_2 - H_2G_3 - H_3G_6 - H_4G_7$

There are 4, two non-touching loops

$L_{2a} = H_1G_2\ H_3G_6$

$L_{2b} = H_1G_2\ H_4G_7$

$L_{2c} = H_2G_3\ H_3G_6$

$L_{2d} = H_2G_3\ H_4G_7$

$\sum L_2 = H_1G_2\ H_3G_6 + H_1G_2\ H_4G_7 + H_2G_3\ H_3G_6 + H_2G_3\ H_4G_7$

There is no possible combination of 3 non-touching loops

$\Delta = 1 - \sum L_1 + \sum L_2$

$\Delta = 1 - [-H_1G_2 - H_2G_3 - H_3G_6 - H_4G_7] + [H_1G_2\ H_3G_6 + H_1G_2\ H_4G_7 + H_2G_3\ H_3G_6 + H_2G_3\ H_4G_7]$

To determine Δ_K

To determine Δ_1 : Δ_1 is the determinant for that part of graph non-touching 1st forward path.

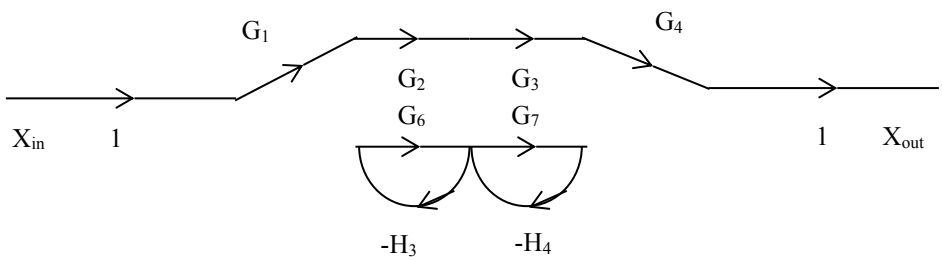

Two individual loops are not touching.

$\Delta_1 = 1 - (L_1 + L_2)$

$= 1 - (H_3G_6 - H_4G_7)$

$\Delta_1 \quad = 1 + H_3G_6 + H_4G_7$

To determine Δ_2 = part of graph not touching 2nd forward path.

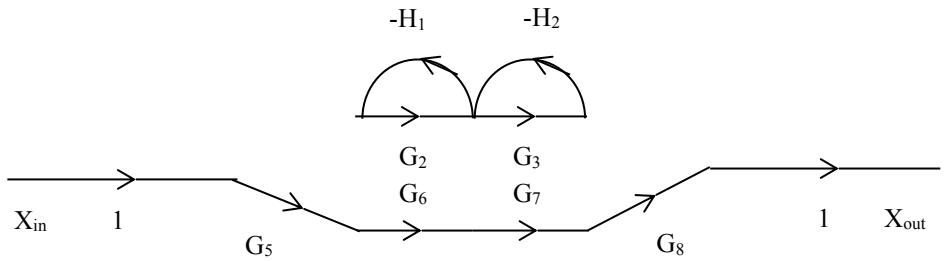

$\Delta_2 \quad = 1 - (L_x + L_y)$

$\quad\quad = 1 - (- G_2H_1 - G_3H_2)$

$\Delta_2 \quad = 1 + G_2H_1 + G_3H_2$

$$M = \frac{\sum_{K=1}^{2} P_K \Delta_K}{\Delta} = \frac{P_1\Delta_1 + P_2\Delta_2}{\Delta}$$

$$\boldsymbol{M = \frac{G_1G_2G_3G_4(1 + G_6H_3 + G_7H_4) + G_2G_6G_7G_8(1 + G_2H_1 + G_3H_2)}{1 + G_2H_1 + G_3H_2 + G_6H_3 + G_7H_4 + G_2G_6H_1H_3 + G_2G_7H_1H_4 + G_3G_6H_2H_3 + G_3G_7H_2H_4}}$$

Ex 2: Find the transfer function for the following figure shown.

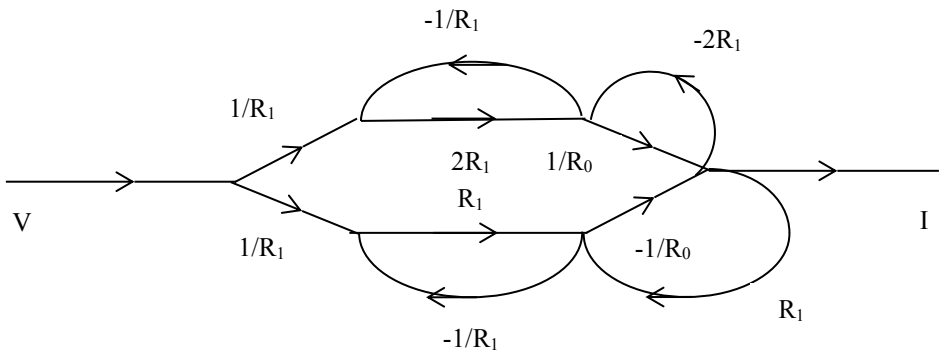

Solution:

Number of forward paths = 2

$$M_1 = \frac{1}{R_1}\ X\ 2R_1\ X\ \frac{1}{R_O} = \frac{2}{R_O}$$

$$M_2 = \frac{1}{R_1}\ X\ R_1\ X - \frac{1}{R_O} = -\frac{1}{R_O}$$

Individual loops = 4

$$L_{1a} = 2R_1X - \frac{1}{R_1} = -2$$

$$L_{1b} = R_1X - \frac{1}{R_1} = -1$$

$$L_{1c} = \frac{1}{R_O}\ X - 2R_1 = -\frac{2R_1}{R_O}$$

$$L_{1c} = -\frac{1}{R_O}\ X\ R_1 = -\frac{R_1}{R_O}$$

Number of two non-touching loops = 3

$$L_{2a} = \left(\frac{-1}{R_1}\ X\ 2R_1\right)\left(R_1\ X\ \frac{-1}{R_1}\right) = 2$$

$$L_{2b} = \left(\frac{-1}{R_1}\ X\ 2R_1\right)\left(\frac{-1}{R_O}\ X\ R_1\right) = \frac{2R_1}{R_O}$$

$$L_{2c} = \left(-2R_1\ X\ \frac{1}{R_O}\right)\left(R_1\ X\ \frac{-1}{R_1}\right) = \frac{2R_1}{R_O}$$

$$\Delta = 1 - \left[-2 - 1\frac{2R_1}{R_O} - \frac{R_1}{R_O}\right] + \left[2 + \frac{2R_1}{R_O} + \frac{2R_1}{R_O}\right]$$

To find Δ_K

$$\Delta_1 = 1 - \left(\cancel{R_1}\ X\ \frac{-1}{\cancel{R_1}}\right) = 2$$

$$\Delta_2 = 1 - \left(2R_1\ X\ \frac{-1}{R_1}\right) = 1 - (-2) = 3$$

$$M = \frac{P_1\Delta_1 + P_2\Delta_2}{\Delta}$$

$$M = \frac{\frac{2}{R_O}X2 + (\frac{-1}{R_O})X\ 3}{1 - \left(-3 - \frac{3R_1}{R_O}\right) + \left(2 + \frac{4R_1}{R_O}\right)}$$

$$\boldsymbol{M = \frac{1}{6R_O + 7R_1}}$$

Ex 3. Using Mason's gain formula, find the gain of the following signal flow graph.

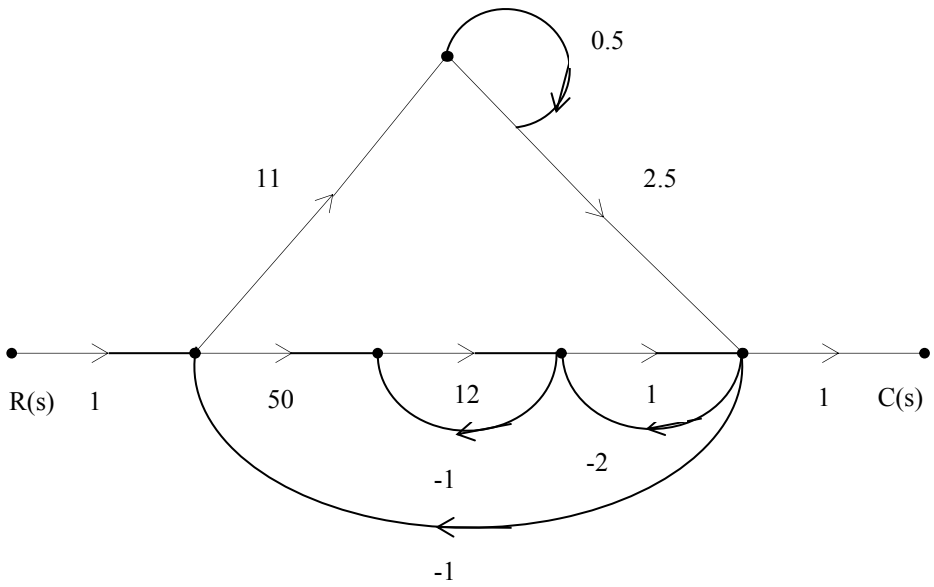

Solution:

There are 2 forward paths

$M_1 = 50 \text{ X } 12 = 600$

$M_2 = 11 \text{ X } 2.5 = 27.5$

There are 5 individual loops

$L_{1a} = -12$, $L_{1b} = -2$, $L_{1c} = -600$, $L_{1d} = -27.5$, $L_{1e} = 0.5$

There are 4, two non-touching loops

$L_{2a} = -12 \text{ X } 1 \text{ X } 0.5 = -6$

$L_{2b} = -2 \text{ X } 0.5 = -1$

$L_{2c} = 11 \text{ X } 2.5 \text{ X } 12 = 330$

$L_{2d} = -50 \text{ X } 12 \text{ X } 0.5 = -300$

There are no, three non-touching loops

$\Delta = 1 - (-12 - 2 - 600 - 27.5 + 0.5) + (-6 - 1 + 330 - 300)$

$\Delta = 665$

Finding Δ_1 for M_1

For M_1 path (0.5) loop does not touch it.

$\Delta_1 = 1 - 0.5 = 0.5$

Finding Δ_2 for M_2 path –12 loop does not touch it.

$\Delta_2 = 1 + 12 = 13$

$$\frac{C(s)}{R(s)} = \frac{600(0.5) + 27.5(13)}{665}$$

$$\boldsymbol{\frac{C(s)}{R(s)} = 0.988}$$

Ex 4. Find transfer function for the following SFG

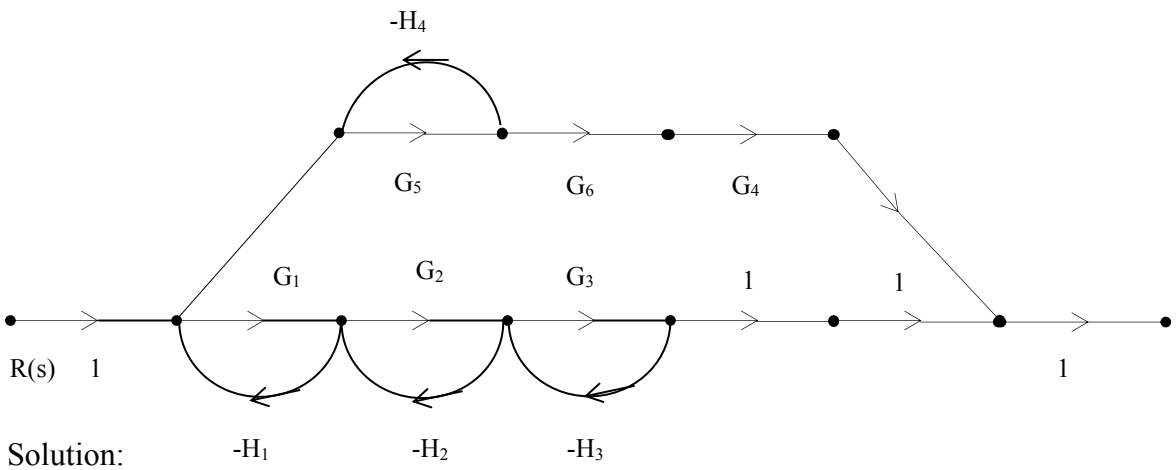

Solution:

There are two forward paths

$M_1 = G_1 G_2 G_3$

$M_2 = G_5 G_6 G_4$

There are 4 individual loops

$L_{1a} = -G_1 H_1$, $L_{1b} = -G_2 H_2$,

$L_{1c} = -G_3 H_3$, $L_{1d} = -G_5 H_4$,

There are 4, two non-touching loops

$L_{2a} = G_1 G_5 H_1 H_4$,

$L_{2b} = G_2 H_2 G_5 H_4$

$L_{2c} = G_3 H_3 G_5 H_4$

$L_{2d} = G_1 H_1 G_3 H_3$

There are 1, three non-touching loops

$L_{3a} = -G_1 H_1 G_3 H_3 G_5 H_4$

There are no four non-touching loops

$\Delta = (-G_1H_1 - G_2H_2 - G_3H_3 - G_5H_4) + (G_1G_5H_1H_4 + G_2H_2G_5H_4 + G_3H_3G_5H_4 + G_1H_1G_3H_3) - (-G_1H_1G_3H_3G_5H_4)$

$\Delta = 1 + G_1H_1 + G_2H_2 + G_3H_3 + G_5H_4 + G_1G_5H_1H_4 + G_2H_2G_5H_4 + G_3H_3G_5H_4 + G_1H_1G_3H_3 + G_1H_1G_3H_3G_5H_4$

To find Δ_1
For M_1 path, $-G_5H_4$ does not touch
$\Delta_1 = 1 - (-G_5H_4)$
$\Delta_1 = 1 + G_5H_4$

To find Δ_2
For M_2 path, $-G_2H_2$ and $-H_3G_3$ does not touch
$\therefore\ \Delta_2 = 1 - (-G_2H_2) - (-G_3H_3)$
$\Delta_2 = 1 + G_2H_2 + G_3H_3$

Transfer function

$$\frac{C}{R} = \frac{M_1\Delta_1 + M_2\Delta_2}{\Delta}$$

$$\frac{C}{R} = \frac{G_1G_2G_3(1 + G_5H_4) + G_4G_5G_6(1 + G_2H_2 + G_3H_3)}{1 + G_1H_1 + G_2H_2 + G_3H_3 + G_5H_4 + G_1G_3H_1H_3 + G_1G_5H_1H_4 + G_2G_5H_2H_4 + G_3G_5H_3H_4 + G_1G_3G_5H_1H_3H_4}$$

Ex 5. Find transfer function for following SFG

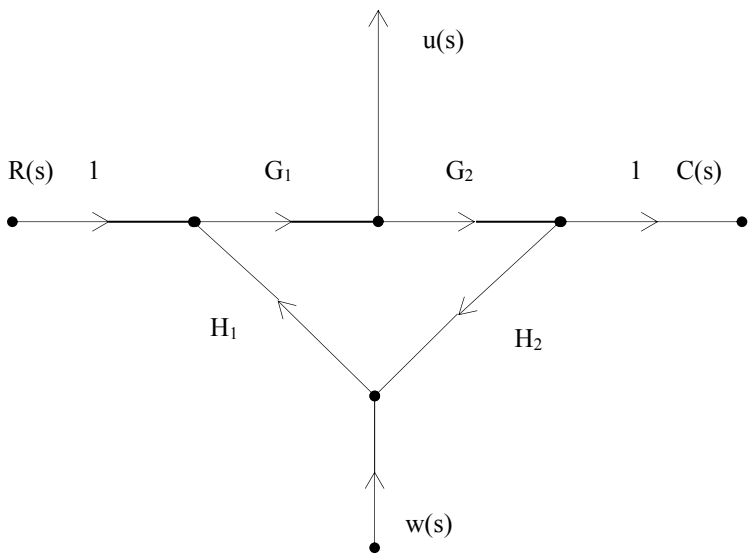

Solution:

It is an example of multi input problem, apply Super position theorem.

Step 1: Keep R(s), set u(s) = w(s) = 0

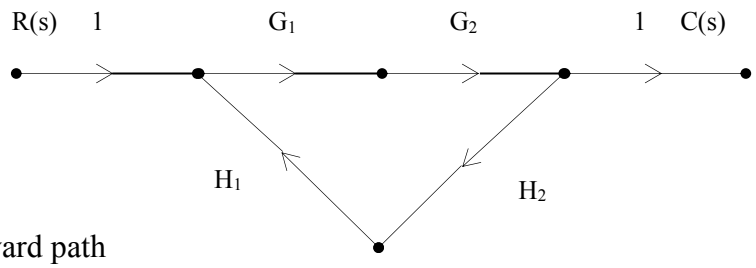

There is 1 forward path

$M_1 = G_1G_2$

There is one loop

$L_{1a} = G_1G_2H_1H_2$

There are no 2 or more non-touching loops

$\Delta = 1 - G_1G_2H_1H_2$

To find Δ_1 for M_1 all loop touches

$\Delta_1 = 1 - 0 = 1$

$$\frac{C(s)}{R(s)} = \frac{G_1G_2}{1 - G_1G_2H_1H_2}$$

Step 2: Keep w(s) only, set R(s) = u(s) = 0

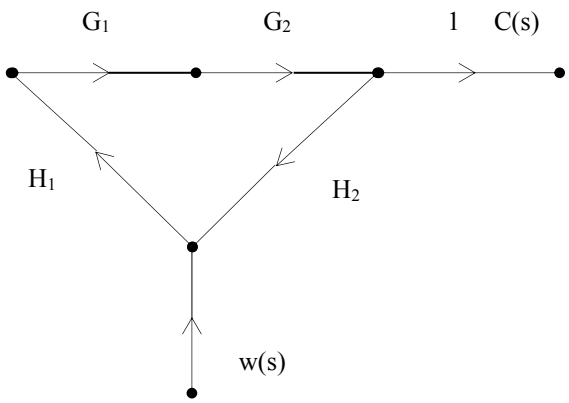

One forward path, $M_1 = H_1G_1G_2$

One individual loop, $L_{1a} = G_1G_2H_1H_2$

There is no non-touching loop

$\therefore \Delta = 1 - G_1G_2H_1H_2$

To find Δ_K : For $\Delta_1 = 1 - 0 = 1$

$$M = \frac{G_1 G_2 H_1}{1 - G_1 G_2 H_1 H_2}$$

Step 3: Keep u(s) only, set R(s) = w(s) = 0

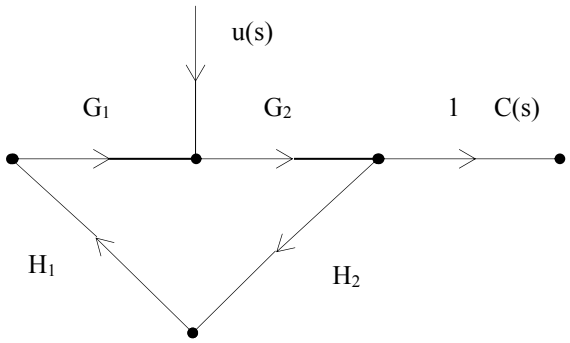

One forward path,

$M_1 = G_2$

One individual loop,

$L_{1a} = G_2 H_1 H_2 G_1$

There is no non-touching loop

$\Delta_1 = 1 - 0 = 1$

$$M = \frac{G_2}{1 - G_1 G_2 H_1 H_2}$$

C(s) is total output due to all three inputs.

$$C(s) = \frac{G_1 G_2 R(s) + G_1 G_2 H_1 w(s) + G_2\, u(s)}{1 - G_1 G_2 H_1 H_2}$$

1. Find the $T.F\,\frac{C(s)}{R(s)}$ of the system, whose signal is flow graph is given below. (Gate – 2003).

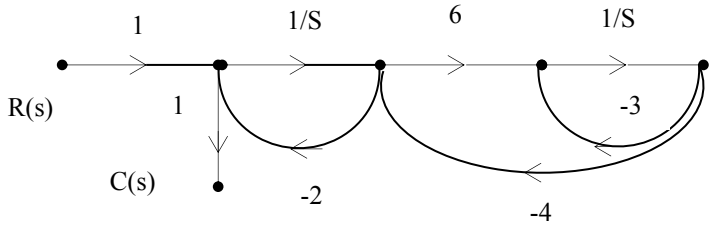

Ans.

SFG has 1 forward path (1)

3 individual loops $\left(-\frac{2}{s}, \frac{3}{s}, -\frac{24}{s}\right)$ and one combination of two non-touching loop $\left(\frac{6}{s}\right)$.

$$\frac{T}{F} = \frac{C(s)}{R(s)} = \frac{1\left[1 + \frac{3}{s} + \frac{24}{s}\right]}{1 + \frac{2}{s} + \frac{3}{s} + \frac{24}{s} + \frac{6}{s}} = \frac{S(S+27)}{S^2 + 295 + 6}$$

2. For the discrete-time system shown in figure. Find the locations of system T.F (Gate – 2015).

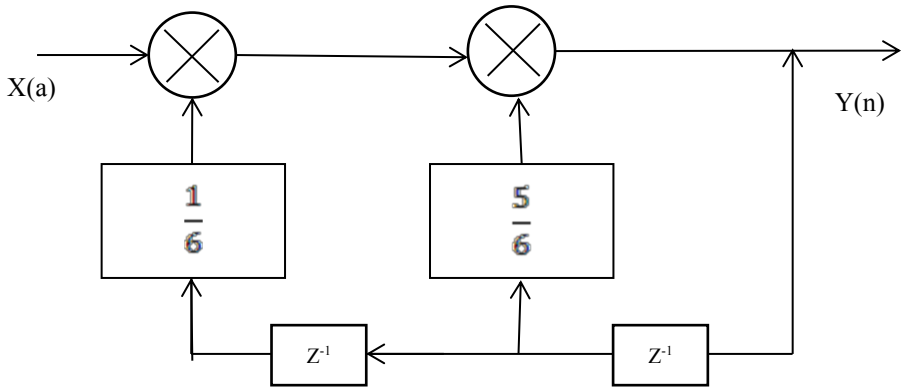

Ans.

$$\frac{Y(Z)}{X(Z)} = H(Z) = \frac{1}{1 - \frac{5}{6}Z^{-1} + \frac{Z^2}{6}} = \frac{Z^2}{Z^2 - \frac{5}{6}Z + \frac{1}{6}}$$

$$= \frac{Z^2}{\left(Z - \frac{1}{2}\right)\left(Z - \frac{1}{3}\right)} = Z = \frac{1}{2}, \frac{1}{3}$$

$$Poles\ @\ Z = \frac{1}{2}, \frac{1}{3}$$

3. Draw a signal flow graph for the following set of algebraic equations. (Gate – 1998)

$y_2 = ay_1 - gy_3$
$y_3 = ey_2 + cy_4$
$y_3 = hy_2 + dy_4$
Find the gains $\frac{y_2}{y_1}$ & $\frac{y_3}{y_1}$

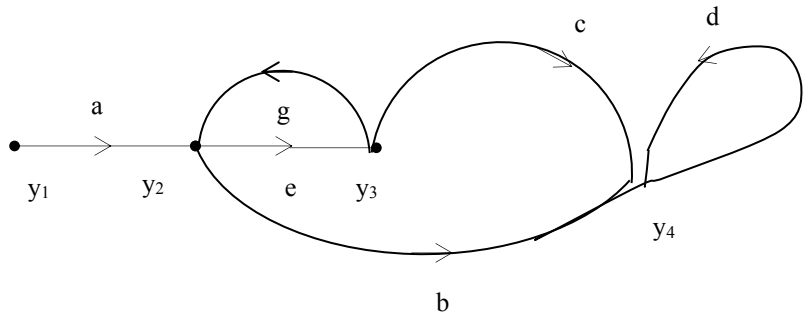

Ans:
The SFG has 3 individual loops $(-ge, -bcg, -d)$ and one combination of two non-touching loops (ged) Δ remains same for $\frac{y_2}{y_1}$ & $\frac{y_3}{y_1}$.

$$\frac{y_2}{y_1} = \frac{a(1+d) - abcg}{1 + d + eg + bcg + edg}$$

$$\frac{y_3}{y_1} = \frac{ae(1+d) + abc}{1 + d + eg + bcg + edg}$$

4. Consider the signal flow graph shown in Figure. The gain C/R is _____.

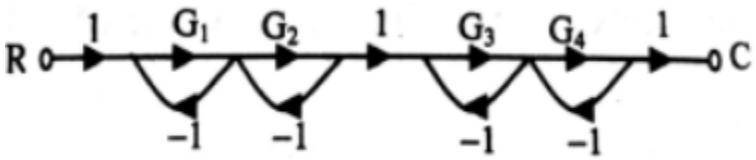

Ans: C/R = (G_1 G_2 G_3 G_4)/((1+G_1+G_2)(1+G_3+G_4))

5. In the SFG shown in the figure $X_2 = T X_1$ then the value of T is___

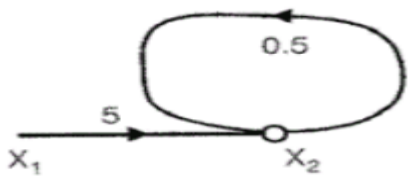

Ans: 10

6. In the SFG the gain C/R will be _____

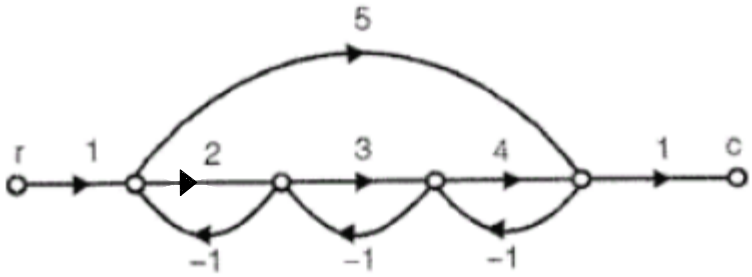

Ans: 1.91